V2V EDTECH LLP

Online Coaching at an Affordable Price.

OUR SERVICES:

- Diploma in All Branches, All Subjects
- Degree in All Branches, All Subjects
- BSCIT / CS
- Professional Courses

☎ **+91 93260 50669**

v2vedtech.com

V2V EdTech LLP

v2vedtech

WINTER– 18 EXAMINATION

Subject Name: Electric circuits and network **Model Answer Subject Code:** 22330

Important Instructions to examiners:

1) The answers should be examined by key words and not as word-to-word as given in themodel answer scheme.
2) The model answer and the answer written by candidate may vary but the examiner may tryto assess the understanding level of the candidate.
3) The language errors such as grammatical, spelling errors should not be given moreImportance (Not applicable for subject English and Communication Skills.
4) While assessing figures, examiner may give credit for principal components indicated in thefigure. The figures drawn by candidate and model answer may vary. The examiner may give credit for anyequivalent figure drawn.
5) Credits may be given step wise for numerical problems. In some cases, the assumed constantvalues may vary and there may be some difference in the candidate's answers and model answer.
6) In case of some questions credit may be given by judgement on part of examiner of relevant answer based on candidate's understanding.
7) For programming language papers, credit may be given to any other program based on equivalent concept.

Q. No.	Sub Q. N.	Answers	Marking Scheme
1	**(A)**	**Attempt any FIVE of the following:**	**10- Total Marks**
	(a)	**Define:** **(i) Admittance** **(ii) Conductance**	**2M**
	Ans:	**i) Admittance-:** Admittance is defined as the reciprocal of impedance .It is denoted by Y. It is given by $\mathbf{Y = (1/Z)}$ **ii) Conductance:** Conductance is the ratio of resistance to the square of impedance .It is denoted by G. It is given by $\mathbf{G = (R/Z^2)}$	**1 M for each definition**

WINTER– 18 EXAMINATION

Subject Name: Electric circuits and network **Model Answer Subject Code:** 22330

	(b)	**Write the equation of open circuit Z parameter.**	**2M**
	Ans:	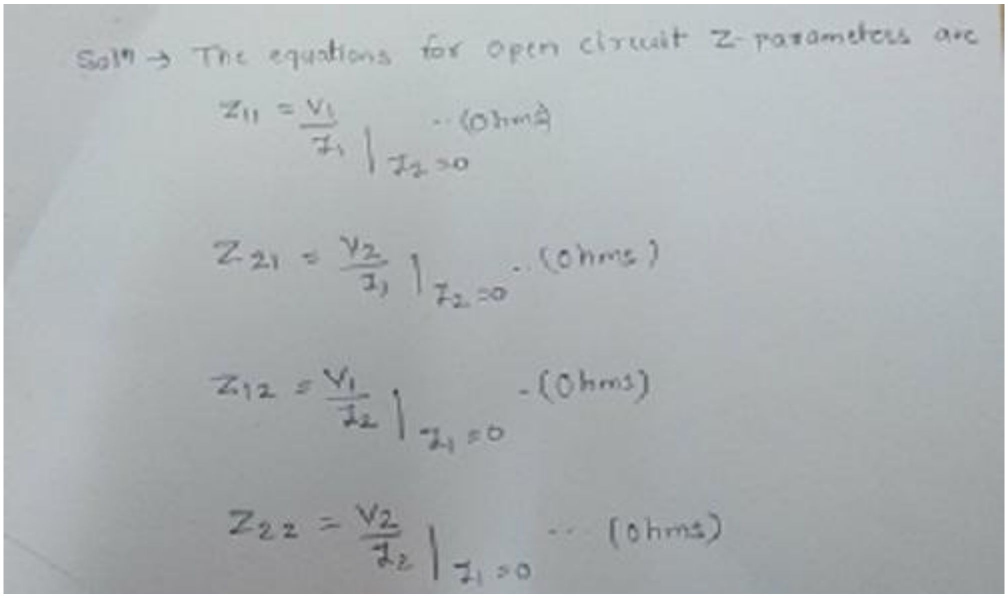 Sol^n → The equations for open circuit Z-parameters are $Z_{11} = \frac{V_1}{I_1}\Big\|_{I_2=0}$ ..(Ohms) $Z_{21} = \frac{V_2}{I_1}\Big\|_{I_2=0}$.(Ohms) $Z_{12} = \frac{V_1}{I_2}\Big\|_{I_1=0}$.(Ohms) $Z_{22} = \frac{V_2}{I_2}\Big\|_{I_1=0}$ ...(Ohms)	**½M for each equation**
	(c)	**Draw phasor diagram for R-L series circuit.**	**2M**
	Ans:	**Phasor diagram for R-L series circuit.** 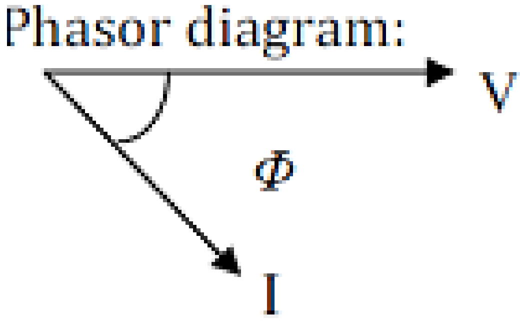 **(OR)**	**2M**

		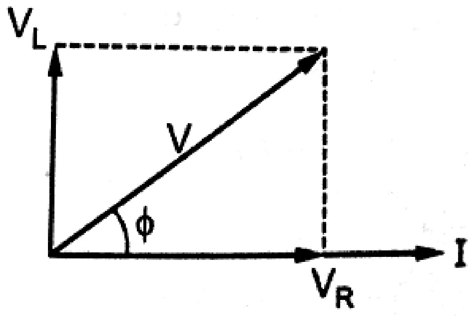	
	(d)	**Draw resonance curve for series resonance.**	**2M**
	Ans:	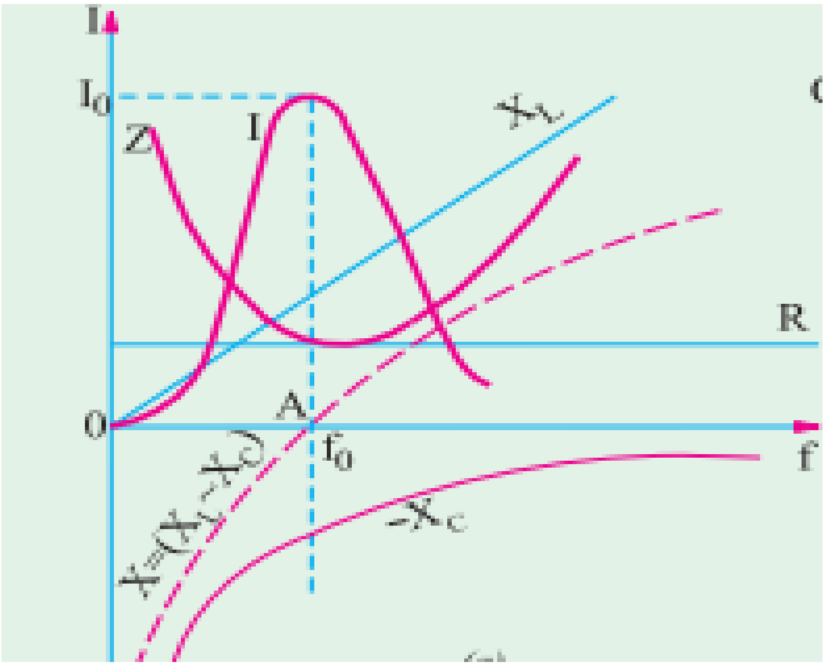	**2M**
	e)	**Define:** **(i) Node** **(ii) Branch**	**2M**
	Ans:	i) **Node** : Node is a junction or common point in a network where two or more branches meet. **ii) Branch :** A branch is defined as that part of a network which lies between two junctions.	**1 M for each definition**

WINTER– 18 EXAMINATION

Subject Name: Electric circuits and network **Model Answer Subject Code:** 22330

	f)	**State Thevenins theorem.**	**2M**
	Ans:	Any network containing active and/or passive elements and one or more dependent and/or independent voltage/or current sources can be replaced by an equivalent network containing a voltage source (Thevenin’s equivalent voltage V_{TH} or V_{OC}) and a series resistance (called Thevenin’s equivalent resistance R_{TH}), where V_{oc} or V_{Th} is the voltage measured across specified open terminals and R_{Th} is the resistance measured across the same terminals when all the sources present in the network are replaced by their internal resistances.	**2M**
	g)	**Write the formula for Delta to Star conversion giving examples.**	**2M**
	Ans:	**The formula for Delta to Star conversion-** 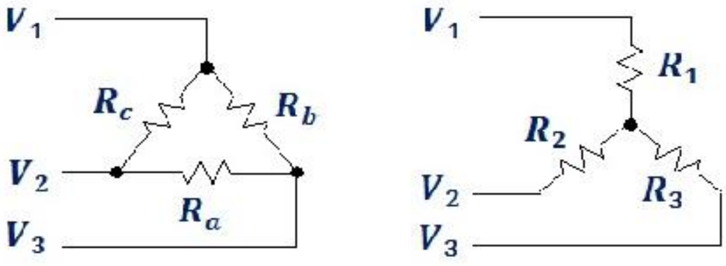 $R_1 = \frac{R_b R_c}{R_a + R_b + R_c}$ $R_2 = \frac{R_a R_c}{R_a + R_b + R_c}$ $R_3 = \frac{R_a R_b}{R_a + R_b + R_c}$	**2M**
Q. No.	Sub Q. N.	Answers	Marking Scheme
2		**Attempt any THREE of the following:**	**12- Total Marks**

WINTER– 18 EXAMINATION

Subject Name: Electric circuits and network **Model Answer Subject Code:** 22330

	a)	**For RLC series circuit draw voltage triangle, power triangle and impedance triangle along with proper labellings and equations for condition $V_L > V_C$.**	**4M**
	Ans:	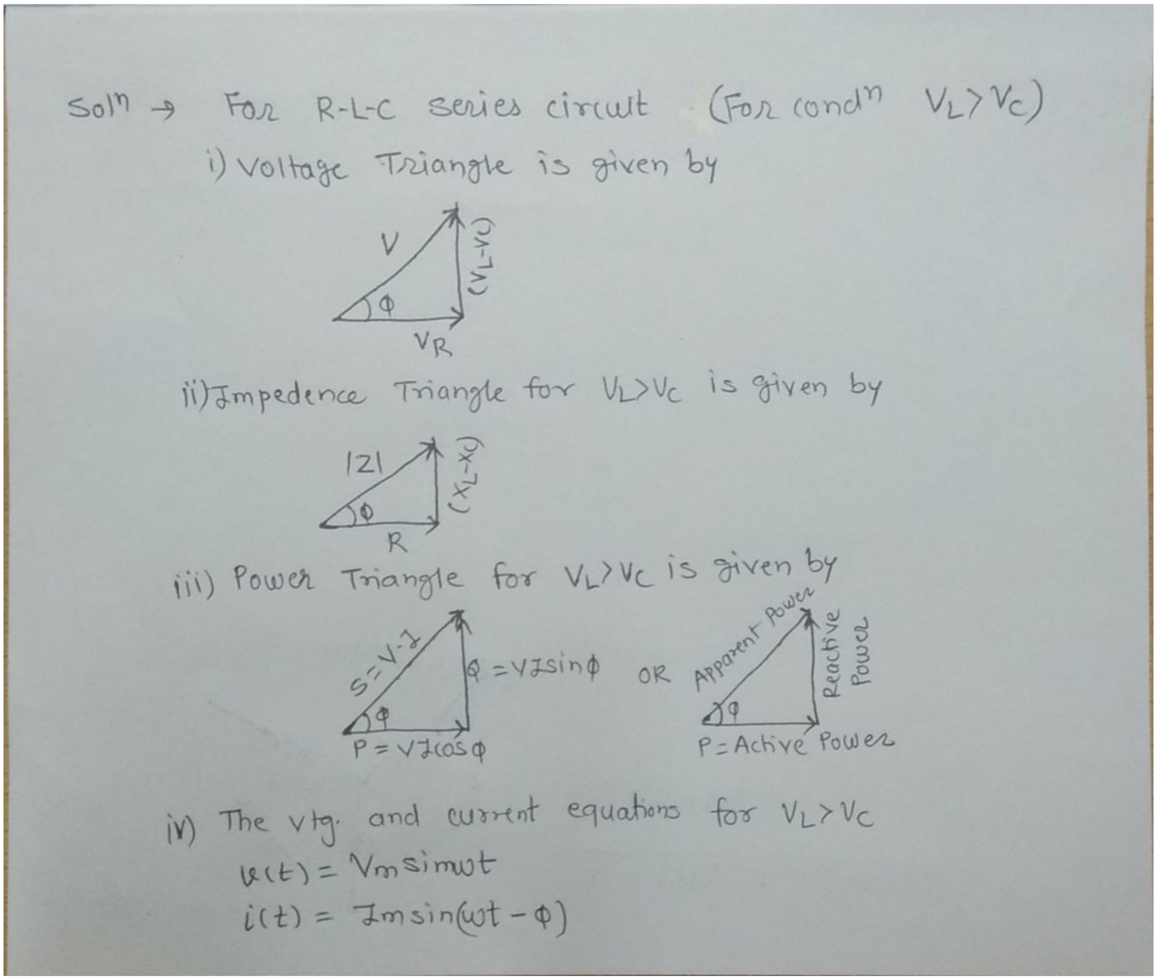 Soln → For R-L-C series circuit (For condn $V_L > V_C$) i) Voltage Triangle is given by ii) Impedence Triangle for $V_L > V_C$ is given by iii) Power Triangle for $V_L > V_C$ is given by iv) The vtg. and current equations for $V_L > V_C$ $v(t) = V_m \sin\omega t$ $i(t) = I_m \sin(\omega t - \phi)$	**Voltage triangle-1 M** **Impedance triangle-1M** **Power triangle -1 M** **Voltage equation-1/2M** **Current equation-1/2 M**
	b)	**Define and state equations for (i) Active Power (ii) Reactive Power** **(iii) Apparent Power.**	**4M**
	Ans:	**i)Active Power (P):** The active power is defined as the average power P_{avg} taken by or consumed by the given	**Active power:** **1.5 M**

		circuit. **(OR)** It is the power which is actually dissipated in the circuit resistance. **P =V.I.CosØ =I^2R** **Unit: -** Watt **OR** Kilowatt **ii)Reactive Power (Q):-** It is the power developed in the reactive elements present in the circuit. **(OR)** The reactive power is defined as the product of V, I and sine of angle between V and I . Q= V.I. sinØ **Units: -** VAR **OR** KVAR **iii)Apparent Power (S):-** It is the product of rms values of applied voltage and current. **Unit:** volt-ampere (VA) **OR** kilo-volt-ampere (kVA) **OR** Mega-volt-ampere (MVA) S=VI=I^2Z VA	**Reactive power** **1.5 M** **Apparent power:** **1 M**
	c)	**Explain the steps for converting practical voltage source into practical current source.**	**4M**
	Ans:		

		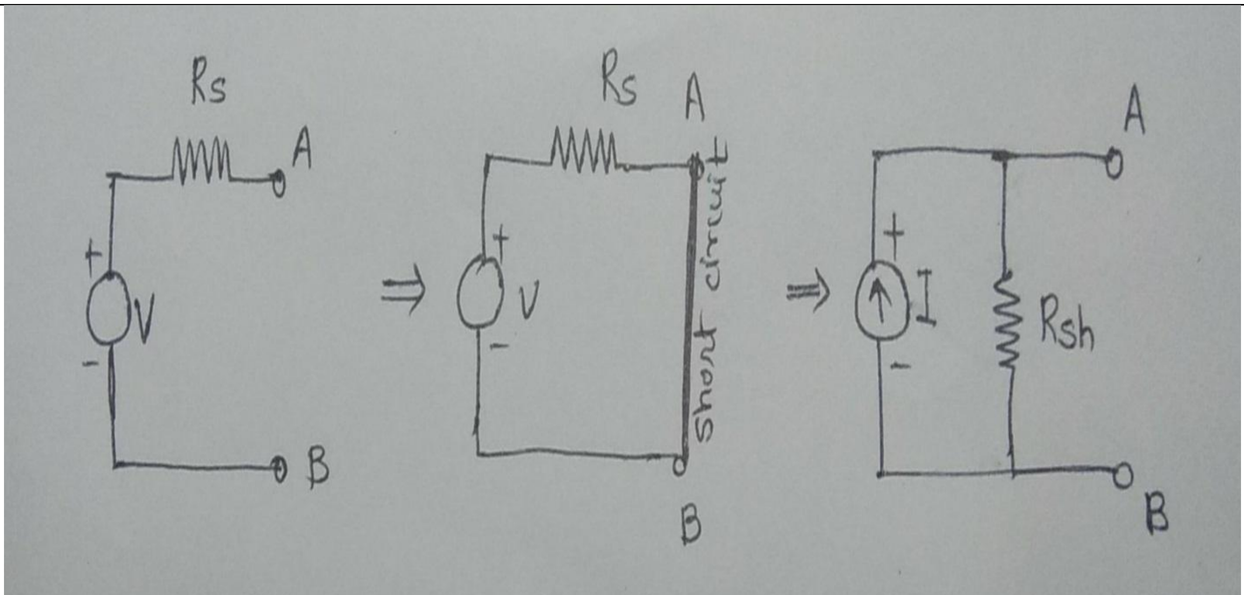 Fig→ Conversion from practical voltage source to practical current source	**Diagram :2 M**
		A given voltage source with a series resistance can be converted into an equivalent current source with a parallel resistance. The steps for converting practical voltage source into practical current source are : i) Terminals A and B of the given voltage source is short circuited as shown. Current supplied by the source is given by Current I=V/R. ii)The value of resistance which is connected in parallel with the equivalent current source will have the same value as that of series resistance. That is Rs=Rsh. ii)The equivalent current source is connected in parallel with the shunt(parallel) resistance.	**Steps** **2 M**

WINTER– 18 EXAMINATION

Subject Name: Electric circuits and network **Model Answer Subject Code: 22330**

	d)	**Three resistances 32 Ω , 40 Ω , 48 Ω are connected in star circuit. Determine its equivalent delta circuit.**	**4M**
	Ans:	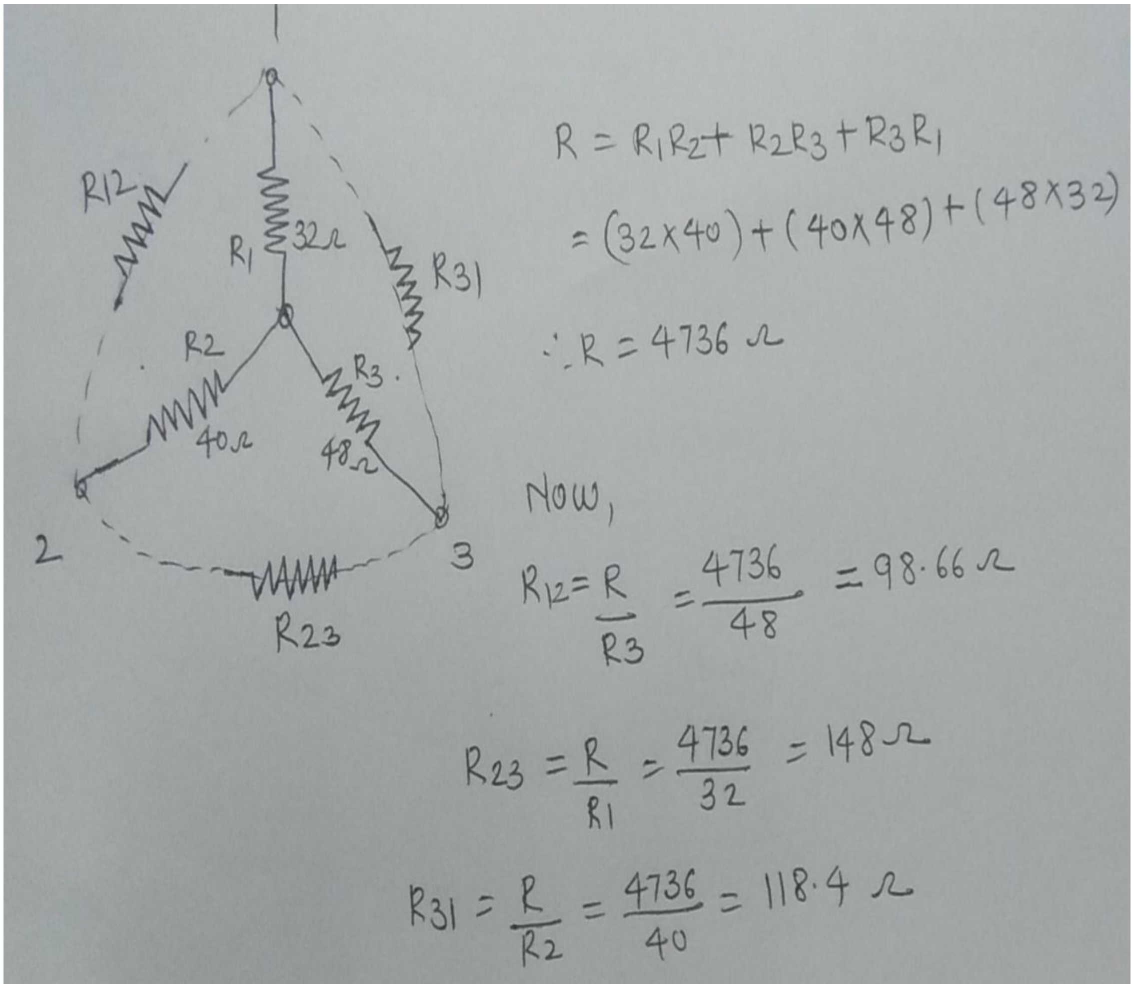 $R = R_1R_2 + R_2R_3 + R_3R_1$ $= (32 \times 40) + (40 \times 48) + (48 \times 32)$ $\therefore R = 4736\ \Omega$ Now, $R_{12} = \frac{R}{R_3} = \frac{4736}{48} = 98.66\ \Omega$ $R_{23} = \frac{R}{R_1} = \frac{4736}{32} = 148\ \Omega$ $R_{31} = \frac{R}{R_2} = \frac{4736}{40} = 118.4\ \Omega$	
Q. No.	Sub Q. N.	Answers	Marking Scheme
3		**Attempt any THREE of the following :**	**12- Total Marks**

	a)	**If Z_1 = 3 + j7 and Z_2 = 12 – j16 are connected in parallel. Find the equivalent impedance of combination.**	**4M**
	Ans:	Equivalent impedance, $Z_{eq} = \frac{Z_1 Z_2}{Z_1+Z_2} = \frac{(3+j7)(12-j16)}{(3+j7)+(12-j16)} = \frac{(7.62<66.8)(20<-53.13)}{(7.62<66.8)+(20<-53.13)} =$ $= \frac{152.4<13.67}{17.5<-40} = 8.71 < 53.67 = 5.16 + j7\ \Omega$	**Formula 1M** **Steps 1M** **Ans. 2M**
	b)	**Determine Bandwidth and Quality factor (Q) for the series circuit.**	**4M**
	Ans:	**Band width:** The bandwidth of aseries circuit is given by the band of frequencies which lies between two points on either side of f_0 where current falls to $I_O/\sqrt{2}$. (graph may be desirable) 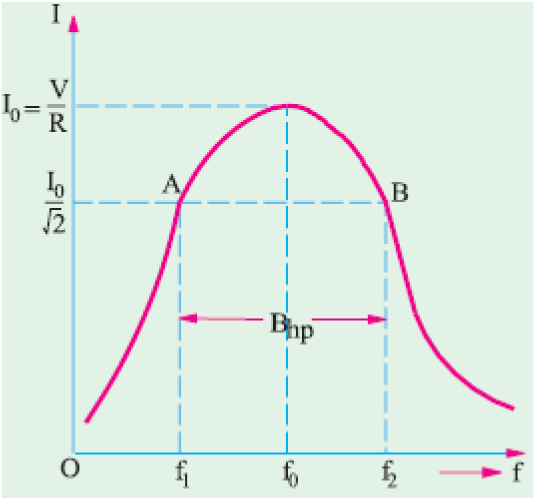 From the given fig., band width AB is, $AB = \Delta f = f_2 - f_1$ or $AB = \Delta\omega = \omega_2 - \omega_1$ where f_1 and f_2 are the corner or edge frequencies.	**2 M** **each**

(OR)

$$\Delta f = f_r/Q_r = \frac{\frac{1}{2\pi\sqrt{LC}}}{\frac{1\sqrt{L}}{R\sqrt{C}}} = \frac{R}{2\pi L}$$

Quality factor:

Note: any one of the following can be considered

Reciprocal of power factor is called quality (*Q)* factor or its figure of merit. The *Q*-factor of aseries circuit can be defined as the ratio of impedance to resistance.

$$Q = \frac{Z}{R}$$

It is also defined as,

$$Q = 2\pi \frac{\text{maximum energy stored per cycle}}{\text{Energy dissipated per cycle}}$$

For a resonant circuit it may be determined in any of the following ways

i) It is given by the voltage magnification produced in the circuit at resonance.

$$\text{Voltage magnification} = \frac{V_{L_0}}{V} = \frac{I_0 X_{L_0}}{I_0 R} = \frac{\text{reactive power}}{\text{active power}} = \frac{X_{L_0}}{R} = \frac{\omega_0 L}{R} = \frac{\text{reactance}}{\text{resistance}}$$

$$\text{or} \quad = \frac{V_{C0}}{V} = \frac{I_0 X_{C0}}{I_0 R} = \frac{\text{reactive power}}{\text{active power}} = \frac{X_{C0}}{R} = \frac{\text{reactance}}{\text{resistance}} = \frac{1}{\omega_0 CR}$$

$$\therefore \; Q\text{-factor,} \quad Q_0 = \frac{\omega_0 L}{R} = \frac{2\pi f_0 L}{R} = \tan\phi$$

ii)

$$Q\text{-factor} = 2\pi \frac{\text{maximum stored energy}}{\text{energy dissipated per cycle}} \qquad \text{...in the circuit}$$

$$= 2\pi \frac{\frac{1}{2}LI_0^2}{I^2\ R\,T_0} = 2\pi \frac{\frac{1}{2}L(\sqrt{2}I)^2}{I^2R(1/f_0)} = \frac{I^2\ 2\pi\ f_0L}{I^2R} = \frac{\omega_0 L}{R} = \frac{1}{\omega_0 CR} \qquad \text{...}(T_0 = 1/f_0)$$

iii)

resonant frequency, $f_0 = \frac{1}{2\pi\sqrt{(LC)}}$ or $2\pi f_0 = \frac{1}{\sqrt{(LC)}}$

Substituting the above in equation, $Q_0 = \frac{2\pi f_0 L}{R}$, **we get,**

$$Q_0 = \frac{1}{R}\sqrt{\frac{L}{C}}$$

iv) Q-factor of a resonant series circuit may be written as,

$$Q_0 = \frac{\omega_0}{\text{bandwidth}} = \frac{\omega_0}{\Delta\omega} = \frac{\omega_0}{R/L} = \frac{\omega_0 L}{R} = \frac{L}{R\sqrt{LC}} = \frac{1}{R}\sqrt{\frac{L}{C}}$$

v) It may also be deduced as,

$$Q_0 = \frac{\omega_0\ L}{R} = \frac{1}{\omega_0\ C\ R} = \frac{1}{R}\sqrt{\frac{L}{C}} = \sqrt{\frac{X_{L0}\ X_{C0}}{R}} = \frac{f_0}{B_{hp}} = \frac{\omega_0}{\omega_2 - \omega_1} = \frac{f_0}{f_2 - f_1}$$

Where B_{hp}= bandwidth of the circuit

	c)	**Using Mesh Analysis find current through 4 Ω resistance.(Refer fig. 1)** 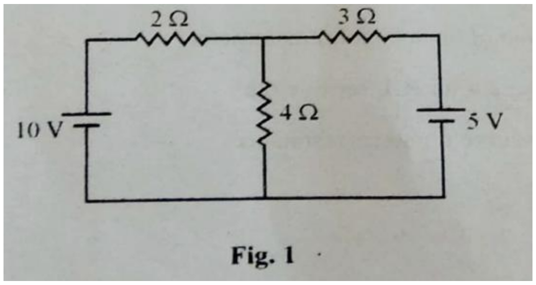 **Fig. 1**	**4M**

	Ans:	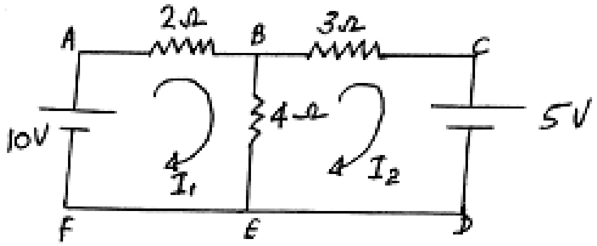 ① Apply KVL to loop ABEFA, $-2I_1 - 4(I_1 - I_2) + 10 = 0$ $-2I_1 - 4I_1 + 4I_2 = -10$ $-6I_1 + 4I_2 = -10$ —— ① ② Apply KVL to loop BCDEB, $-3I_2 - 5 - 4(I_2 - I_1) = 0$ $-3I_2 - 5 - 4I_2 + 4I_1 = 0$ $4I_1 - 7I_2 = 5$ —— ② Solving eqns. ① & ② we get, $I_1 = 1.92A$, $I_2 = 0.38 A$ ∴ Current through 4Ω, $I_1 - I_2 = 1.92 - 0.38$ $= 1.54 A$ (downwards)	**Correct calculation-4M(Give step marking)**
	d)	**Explain the procedure for solving Thevenins theorem using suitable example.**	**4M**
	Ans:	Steps to find Thevenin's equivalent circuit, taking an example is as follows:	**1M each**

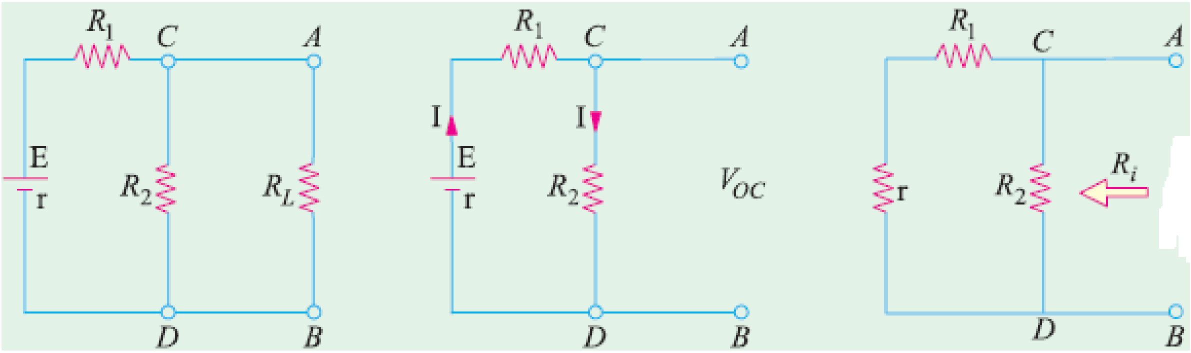

Fig.(a) fig.(b) fig.(c)

1. From the given circuit(fig.a),Remove $R_L$from the terminals *A* and *B* and redraw the circuit as shown in Fig.b.

2.Calculate the open-circuit voltage *Voc* which appears across terminals*A* and *B.*

As seen, *Voc* = drop across R_2 = IR_2 where *I* is the circuit currentwhen *A* and *B* are open.

$$I = \frac{E}{R_1 + R_2 + r} \quad \therefore \; V_{oc} = IR_2 = \frac{ER_2}{R_1 + R_2 + r}$$ [*r* is the internal resistance of battery]

It is also called 'Thevenin voltage' V_{th}.

3.Now, imagine the battery to be removed from the circuit, leaving its internal resistance *r* behind and redraw the circuit, as shown in Fig.(*c*). When viewed *inwards*from terminals *A* and *B*, the equivalent resistance is given as,

$$R = R_2 \,||\, (R_1 + r) = \frac{R_2(R_1 + r)}{R_2 + (R_1 + r)}$$

This is called Thevenin's equivalent resistance $R_{th.}$

4.Connect R_L back across terminals *A* and *B*(fig.d)from where it was temporarily removed earlier.

		Current flowing through *RL* is given by $$I = \frac{V_{th}}{R_{th} + R_L}$$ 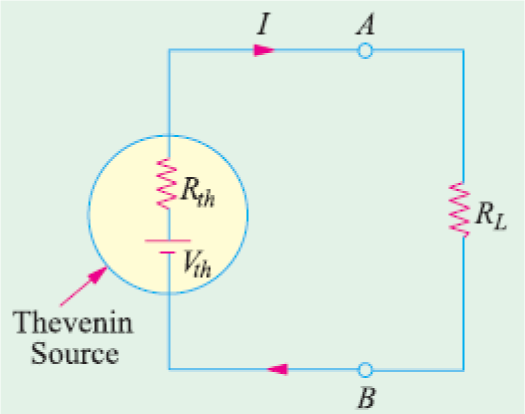 **Fig.(d)**	

Q. No.	Sub Q. N.	Answers	Marking Scheme
4		**Attempt any THREE of the following :**	**12- Total Marks**
	(a)	**A coil has resistance of 4 Ω and an inductance of 9.55 mH. Calculate** **(i) Reactance (ii) The impedance (iii) The current taken from 240 V, 50 Hz supply.**	**4M**

	Ans:	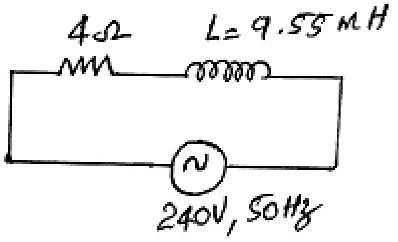 Data given: $R = 4\Omega$, $L = 9.55 mA$, $V = 240V$, $f = 50Hz$ i) Reactance, $X_L = 2\pi f L = 2\times 3.14\times 50\times 9.55\times 10^{-3} = 3\Omega$ ii) Impedance, $Z = R + jX_L = 4 + j3 = 5\angle 36.87\,\Omega$ iii) Current, $I = \frac{V}{Z} = \frac{240}{5} = \underline{\underline{48A}}$ (or) ii) Impedance, $Z = \sqrt{R^2 + X_L^2} = \sqrt{4^2+3^2} = \underline{\underline{5\Omega}}$	**1M each for parameters & 1M for proper steps followed**
	(b)	**Draw the phasor diagrams for a series RL and series RC with AC supply.**	**4M**
	Ans:	**Phasor diagram of RL series circuit:** 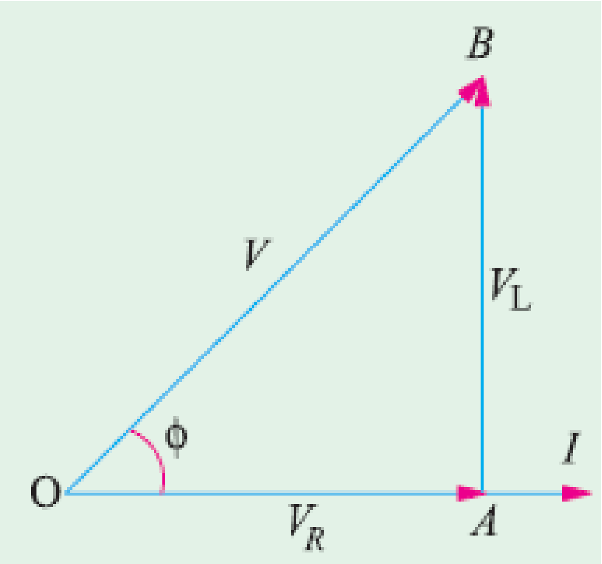	**2M for each diagram**

Phasor diagram of RC series circuit:

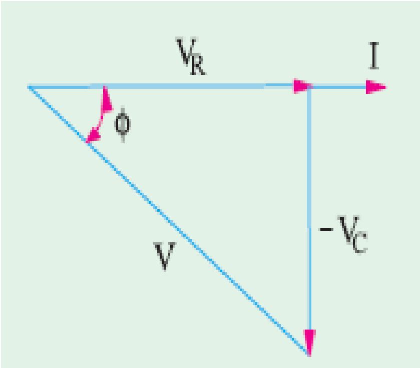

(c) **Compare series and parallel circuits.** **4M**

Ans:

1M each for any 4 points

Sr.No.	**Series circuit**	**Parallel circuit**
1	Element are connected end-on-end 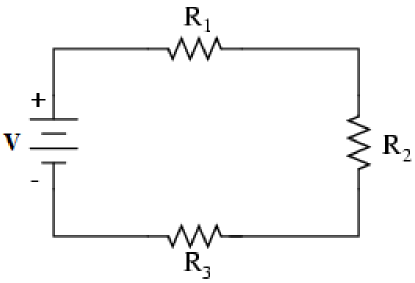	Equi-potential ends are connected together 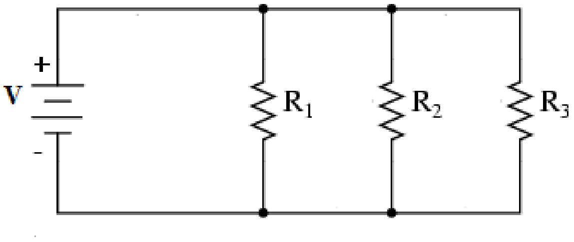
2	Same current flows through all parts of the circuit.	Same voltage acts across all parts of the circuit
3	Different resistors have their individual voltage drops.	Different resistors have their individual currents.
4	Voltage drops are additive.	Branch currents are additive.

5	Applied voltage equals the sum of different voltage drops.	Individual voltages is equal to supply voltage	
6	Resistances are additive.	Conductances are additive.	
7	Powers are additive.	Powers are additive	

(d)	**Using source transformation technique find the resultant current (I) through circuit. (Refer fig. 2)** 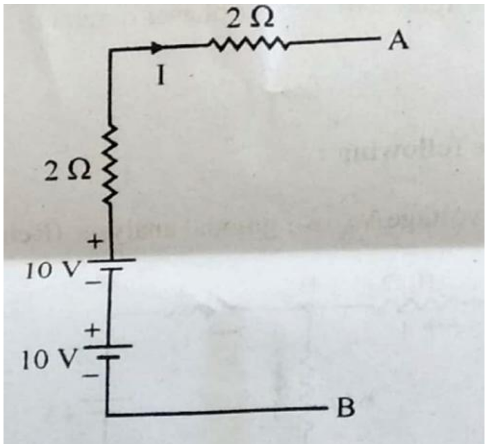 **Fig. 2**	**4M**

	Ans:	Adding both the Sources the Circuit becomes, 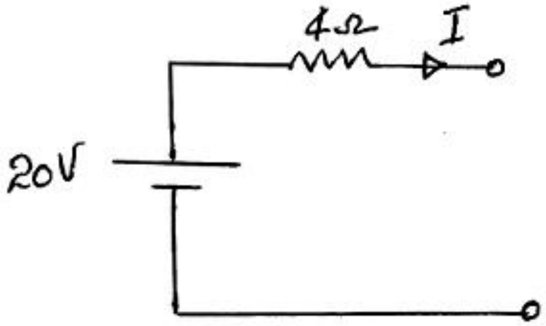 Its equivalent Current Source is 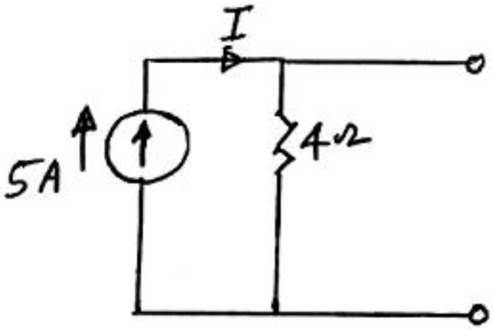 $I = 5A$	**Correct calculation-4M**
	(e)	**Using super-position theorem find current through 4 Ω resistance.(Refer fig. 3)** 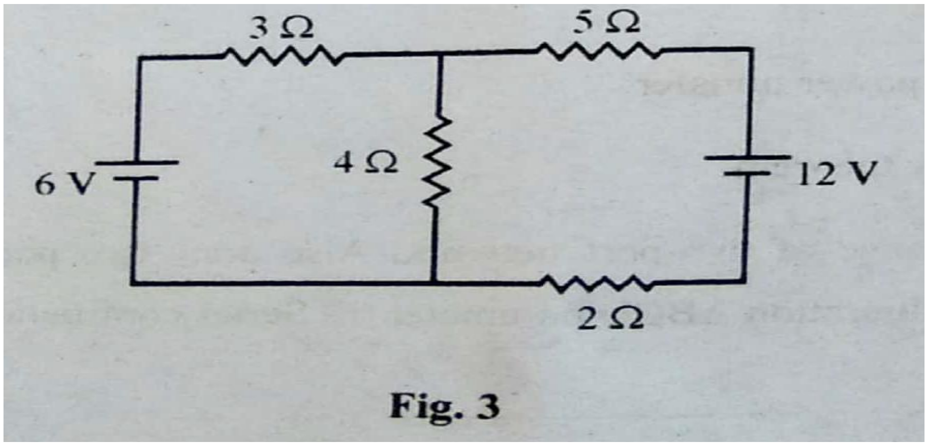 **Fig. 3**	**4M**

	Ans:	Step I (With 6V Source alone) 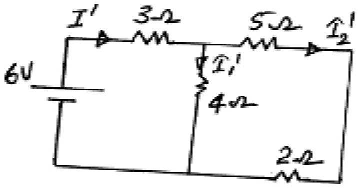 $I' = \frac{V}{Req} = \frac{6}{3+4//(5+2)}$ $= \frac{6}{3+2.55} = 1.\overrightarrow{08}A$ $I_1' = \frac{I' \times (5+2)}{4+5+2} = \frac{1.08 \times 7}{11} = \underline{0.69A} \downarrow$ Step II (With 12V alone) 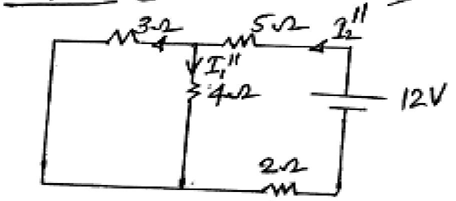 $I_2'' = \frac{V}{Req} = \frac{12}{5+(3\|\|4)+2}$ $= \frac{12}{8.71} = 1.38A$ $I_1'' = \frac{I_2'' \times 3}{3+4} = \frac{1.38 \times 3}{7} = 0.59A \downarrow$ ∴ Current through 4Ω $= I_1' + I_1'' = 0.69 + 0.59 = \underline{1.28A} \downarrow$	**Corrct calculation -4M**

Q. No.	Sub Q. N.	Answers	Marking Scheme
5.		**Attempt any TWO of the following:**	**12- Total Marks**
	a)	**Derive the expression for resonance frequency for parallel circuit.**	**6M**
	Ans:	A parallel circuit containing an inductance and a capacitance is said to be in resonance when the current through the parallel combination is in phase with the supply voltage. Consider a parallel combination of L and C as shown below.	**Diagram 2M, derivation 4M**

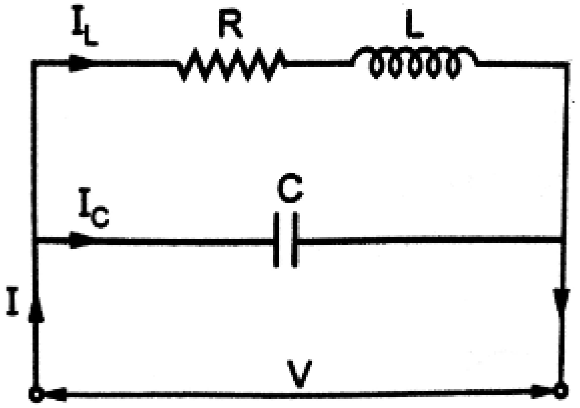

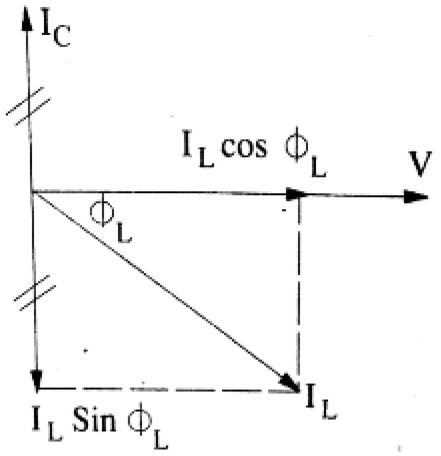

The vector diagram for this circuit is as shown.

The net reactive component of current = Ic - $I_L Sin\varphi_L$.

At resonance ,its value is zero.

That is I_c - $I_L Sin\varphi_L$ = 0 or I_c = $I_L Sin\varphi_L$

		From the diagram above, $I_L = V/Z$, $\sin\varphi_L = X_L/Z$, $I_c = V/X_c$ Substituting these values in the above equation, the condition for resonance becomes $V/X_c = (V/Z)(X_L/Z)$ or $(X_L)(X_c) = Z^2$ Substituting $X_L = \omega L$ and $X_c = 1/\omega C$ $(\omega L/\omega C) = Z^2$ $L/C = R^2 + (2\pi fL)^2$ $(2\pi fL)^2 = \frac{L}{C} - \frac{R^2}{L^2}$ $2\pi f = \sqrt{\frac{1}{LC} - \frac{R^2}{L^2}}$ If $f = f_r$ = resonant frequency, then, $f_r = \frac{1}{2\pi}\sqrt{\frac{1}{LC} - \frac{R^2}{L^2}}$ If R is negligible, then $fr = \frac{1}{2\pi\sqrt{LC}}$	
	b)	**Calculate current through 8 Ω resistance using Norton's theorem.(Refer fig. 4)**	**6M**

WINTER– 18 EXAMINATION

Subject Name: Electric circuits and network **Model Answer Subject Code:** **22330**

		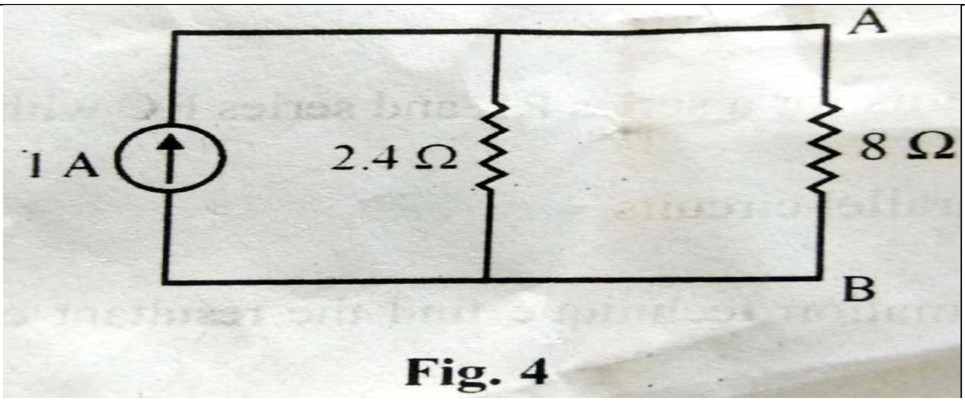 Fig. 4	
	Ans:	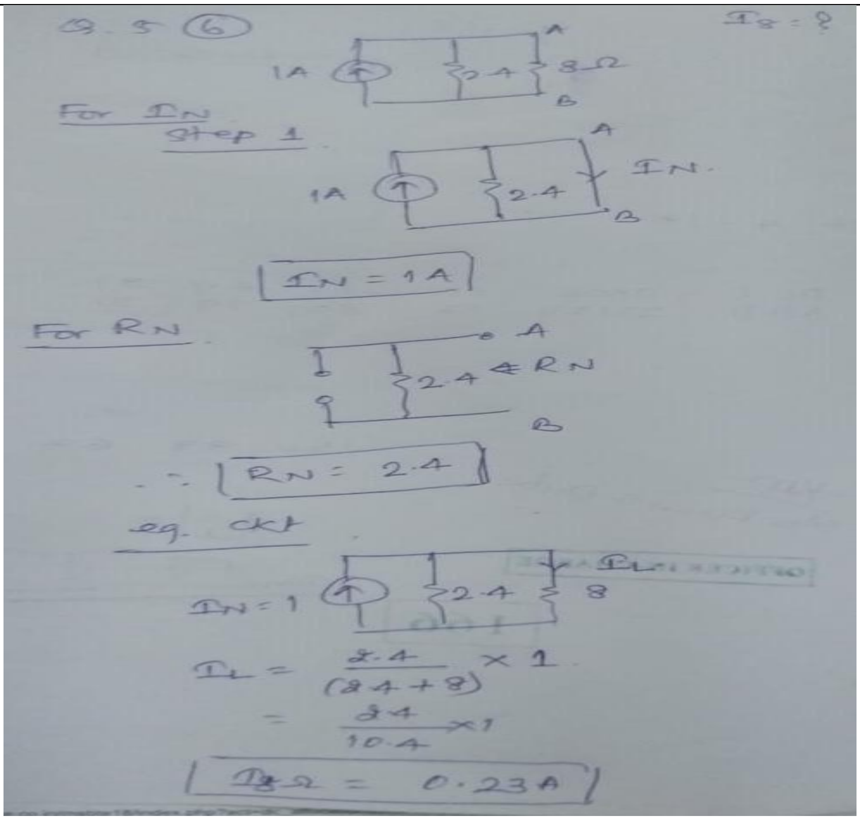 Q. 5 ⑥ I_8 = ? For I_N Step 1 I_N. $\boxed{I_N = 1A}$ For R_N $\Leftarrow R_N$ $\therefore \boxed{R_N = 2.4}$ eq. ckt I_L $I_N = 1$ $I_L = \frac{2.4}{(2.4+8)} \times 1$ $= \frac{2.4}{10.4} \times 1$ $\boxed{I_{8\Omega} = 0.23A}$	**To find** **I_N 1M** **R_N 2M** **Equivalent ckt. 1M** **I_L 1M** **I_8 1M**
	c)	**Explain ' Π ' and 'T' circuit with proper phasor diagram.**	**6M**
	Ans:	**Note : As phasor diagram of 'Π ' and 'T' circuit is not specified in syllabus, marks may be awarded for any relevant diagram and explanation of T and π network.**	**Diagram 2M each** **Explanation: 1M each**

		T networks are used torepresent the equivalent of transmission line theory, filters, etc. Ladder network in transmission lines is constructed using T network in series.If Z parameters and ABCD parameters of a network are known, then T network can be constructed. **T network** 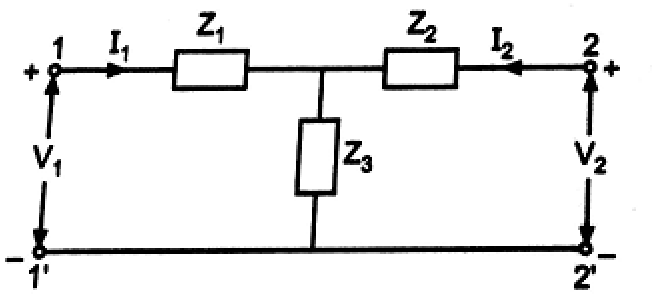 **π network** This is also an important network frequently used in transmission line theory. If Y parameters of a network are known, then π network can be constructed. 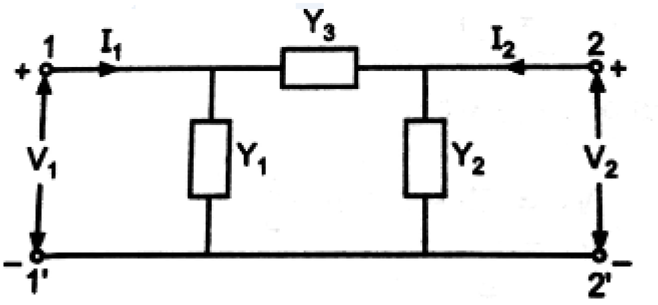 	
Q. No.	Sub Q. N.	Answers	Marking Scheme
6.		**Attempt any TWO of the following :**	**12- Total Marks**

WINTER– 18 EXAMINATION

Subject Name: Electric circuits and network **Model Answer Subject Code:** 22330

	a)	**Calculate the nodal voltage V_B using nodal analysis. (Refer fig. 5)** 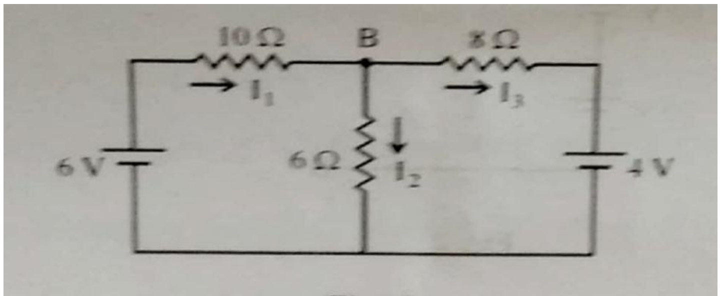 Fig. 5	**6M**
	Ans:	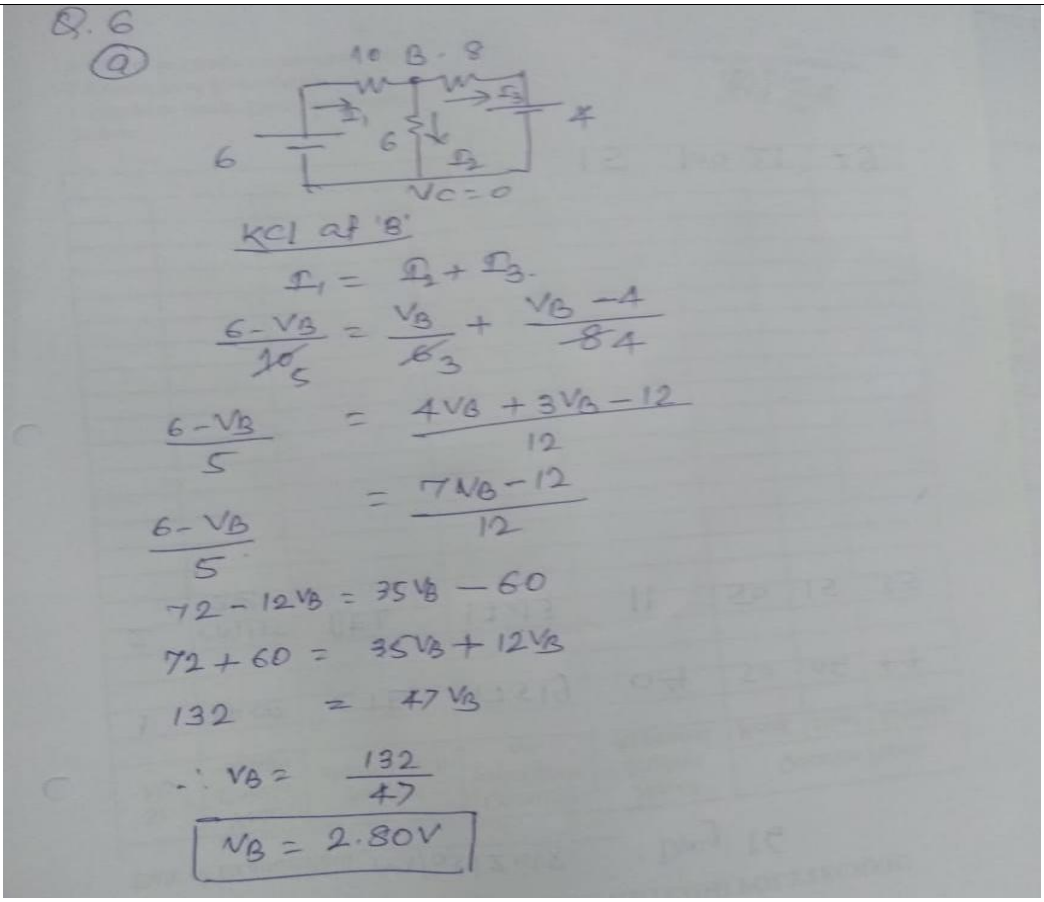 Q.6 (a) KCl at 'B' $I_1 = I_2 + I_3.$ $\frac{6-V_B}{\cancel{10}\,5} = \frac{V_B}{\cancel{6}\,3} + \frac{V_B-4}{\cancel{8}\,4}$ $\frac{6-V_B}{5} = \frac{4V_B + 3V_B - 12}{12}$ $= \frac{7V_B - 12}{12}$ $\frac{6-V_B}{5}$ $72 - 12V_B = 35V_B - 60$ $72 + 60 = 35V_B + 12V_B$ $132 = 47V_B$ $\therefore V_B = \frac{132}{47}$ $\boxed{V_B = 2.80V}$	**Correct calculation-6M**
	b)	**State and explain:** **(i) Maximum power transfer** **(ii) Reciprocity theorem**	**6M**
	Ans:	**Maximum Power Transfer Theorem:** Maximum Power Transfer Theorem states that "Maximum power is transferred from the	**Statement 1M**

source to the load when the load resistance is equal to the Thevenin's equivalent resistance of the given circuit as seen from load terminals"

each Explanation 2M each

.i. e, $R_L = R_{TH}$

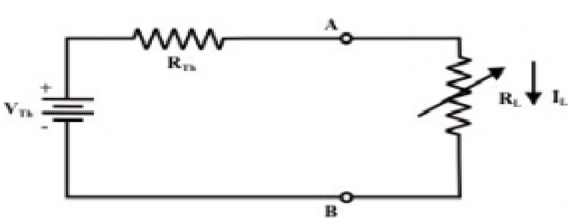

In above figure a variable load resistance R_L is connected to an equivalent Thevenin circuit of original circuit. The current for any value of load resistance is,

$$I_L = \frac{V_{TH}}{R_{TH}+R_L}$$

Then, the power delivered to the load is..

$$P_L=I_L^2\times R_L \therefore\ P_L=\left(\frac{V_{TH}}{R_{TH}+R_L}\right)_L^2\times R_L.$$

Maximum power transfer occurs when the load resistance $R_L= R_{TH}$.

Substituting $R_L= R_{TH}$in the above equation, we get

$P_L= [V_{Th}/(R_L +R_L)^2] R_L$

$= (V_{Th}/2R_L^2) \text{ x } R_L,$

$P_{Lmax} = \frac{V^2}{4R_L}$

Reciprocity Theorem :

Statement:

In any linear bilateral network, if a source of emf E in any branch produces a current I in any other branch , then the same emf E acting in the second branch would produce the same current I in the first branch.

(OR)

In any branch of a network or circuit, the current due to a single source of voltage (V) in the network is equal to the current through that branch in which the source was originally placed when the source is again put in the branch in which the current was originally obtained.

Explanation :

Consider the two circuits shown below.

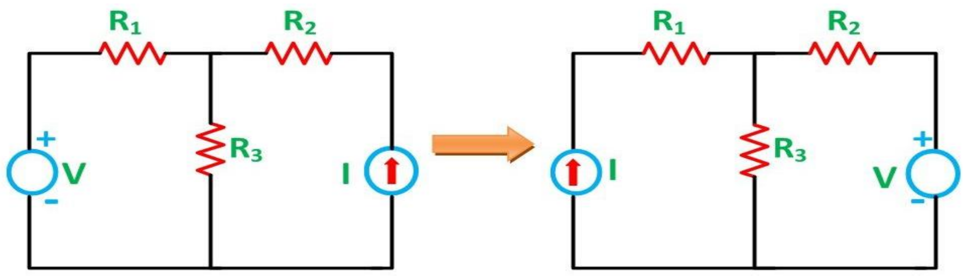

The various resistances R_1, R_2, R_3 are connected in the circuit diagram above with a voltage source (V) in first loop and an ammeter in second loop in first circuit.

In the second circuit the positions of voltage source and ammeter are interchanged

According to Reciprocity Theorem, the ratio of V / I called transfer resistance. It remains same in both cases. In this way the theorem is useful for solving networks.

c) **Explain significance of two-port network. Also draw two port network for** **6M**

(i) Cascade configuration ABCD parameter (ii) Series configuration

Ans: **Significance of two-port network:-** **2M**

A two-port network is regarded as a "black box" with its properties specified by a matrix of numbers. This allows the response of the network to signals applied to the ports to be calculated easily, without solving for all the internal voltages and currents in the network. **2M**

Cascade configuration ABCD parameter :-

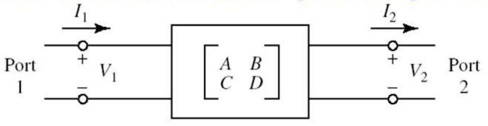

$$\begin{bmatrix} V_1 \\ I_1 \end{bmatrix} = \begin{bmatrix} A & B \\ C & D \end{bmatrix} \begin{bmatrix} V_2 \\ I_2 \end{bmatrix}$$

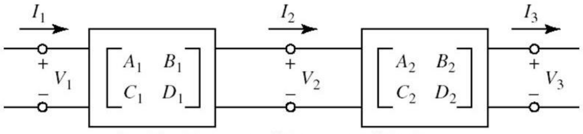

$$\begin{bmatrix} V_1 \\ I_1 \end{bmatrix} = \begin{bmatrix} A_1 & B_1 \\ C_1 & D_1 \end{bmatrix} \begin{bmatrix} A_2 & B_2 \\ C_2 & D_2 \end{bmatrix} \begin{bmatrix} V_2 \\ I_2 \end{bmatrix}$$

2M

OR

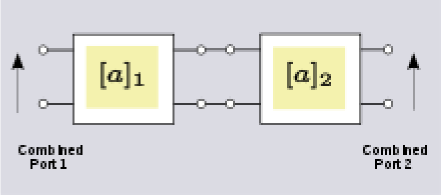

Series configuration:-

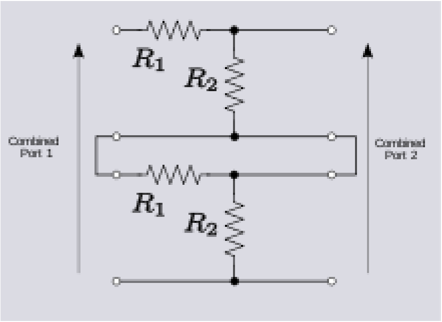

OR

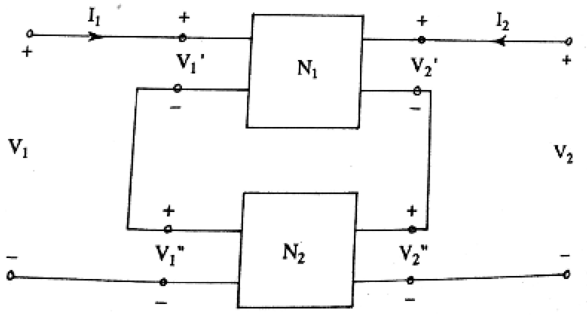

		Where N_1 and N_2 are two 2-port networks	

Important Instructions to examiners:

1) The answers should be examined by key words and not as word-to-word as given in themodel answer scheme.
2) The model answer and the answer written by candidate may vary but the examiner may tryto assess the understanding level of the candidate.
3) The language errors such as grammatical, spelling errors should not be given moreImportance (Not applicable for subject English and Communication Skills.
4) While assessing figures, examiner may give credit for principal components indicated in thefigure. The figures drawn by candidate and model answer may vary. The examiner may give credit for anyequivalent figure drawn.
5) Credits may be given step wise for numerical problems. In some cases, the assumed constantvalues may vary and there may be some difference in the candidate's answers and model answer.
6) In case of some questions credit may be given by judgement on part of examiner of relevant answer based on candidate's understanding.
7) For programming language papers, credit may be given to any other program based on equivalent concept.

Q. No.	Sub Q. N.	Answers	Marking Scheme
1	**(A)**	**Attempt any FIVE of the following :**	**10- Total Marks**
	(a)	**Define impedance and reactance related to single phase AC series circuit. Give unit of both.**	**2M**
	Ans:	Impedance of single phase AC series circuit is defined as the net opposition offered to the flow of AC current by the combination of R, L and C. Unit of Impedance is Ω(Ohm). Reactance of single phase AC series circuit is defined as the opposition offered to the flow of AC current by either inductor(L) or capacitor(C). Unit of reactance is Ω(Ohm).	Each correct definition with its unit-1M
	(b)	**Draw the impedance triangle for R-L series circuit.**	**2M**

	Ans:	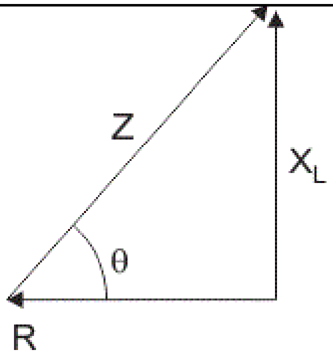 **Fig. impedance triangle for R-L series circuit.**	impedance triangle-2M
	(c)	**State Q factor for parallel R.L.C. circuit.**	**2M**
	Ans:	Q factor for parallel R.L.C. circuit is defined as the current magnification provided at resonance. The magnitude of current flowing through inductor and capacitor is equal to Q times the input sinusoidal current I. As the parallel circuit magnifies the current it is also called as the current resonance circuit. OR The Quality factor of Parallel resonance RLC circuit is defined as the ratio of current circulating between its two branches to the line current drawn from the supply. Mathematically, $Q = RX_C$	Any correct definition-2M
	(d)	**Give four steps to solve nodel analysis.**	**2M**
	Ans:	four steps to solve nodal analysis- 1.all the nodes present in the network including the reference(ground) node)are identified and marked . The number of equations to be solved is given by (n-1) where n= no of independent nodes. 2. Mark all the branch currents. 3. Using KCL write current equation for each node in terms of node voltage and sources present. 4. The equations can be solved either simultaneously or by Cramer's rule to obtain various node voltages.	Each step - 1/2 M

		The current flowing through any element can be found out by substituting the value of node voltages in the relevant equation.	
	e)	**Write the formula for star to delta.**	**2M**
	Ans:	**The formula for star to delta** **Star to Delta (Y to Δ) Resistance Conversion Formula** 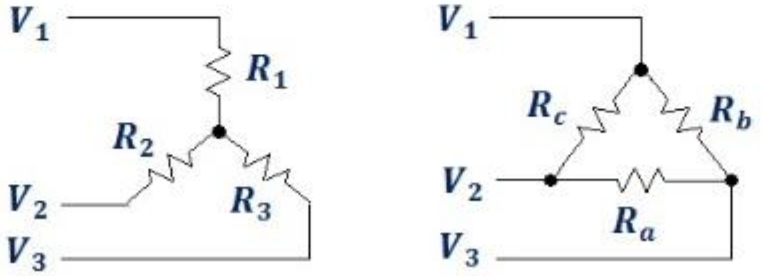 $R_a = \frac{R_1R_2+R_1R_3+R_2R_3}{R_1}$ $R_b = \frac{R_1R_2+R_1R_3+R_2R_3}{R_2}$ $R_c = \frac{R_1R_2+R_1R_3+R_2R_3}{R_3}$	Correct formula e with diagram- 2M
	f)	**State Thevenin's theorem.**	**2M**
	Ans:	Any network containing active and/or passive elements and one or more dependent and/or independent voltage/or current sources can be replaced by an equivalent network containing a voltage source (Thevenin's equivalent voltage V_{TH} or V_{OC}) and a series resistance (called Thevenin's equivalent resistance R_{TH})where V_{TH} is the voltage measured across open terminals A and B and Rth is the resistance across same terminals A and B when all the sources are replaced by their internal resistances.	Stateme nt (2 Mark
	g)	**State the significance of two port network.**	**2M**
	Ans:	**The significance of two port network-**	2M

Any electrical network can be easily analyzed if it is represented with an equivalent model, which gives the relation between input and output variables. A two port network is a network having 2 ports. One port is used as input port and the other port is used as output port. These ports are called port1 and port2 respectively.

Once a network is represented in this equivalent form, the response of the network to signals applied to the ports can be calculated easily, without solving for all the internal voltages and currents in the network. It also allows similar circuits or devices to be compared easily.

A two port network representation is shown in the following figure.

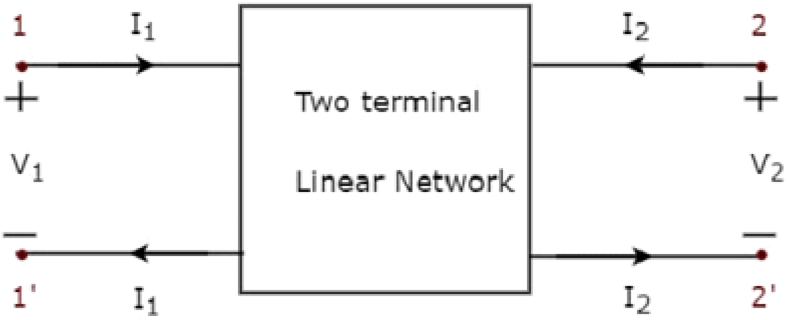

Here, terminals 1 and 1’ represent port1 and terminals 2 & 2’ represent port2.

The common models that are used are referred to as z-parameters, y-parameters, h-parameters, g-parameters, and ABCD-parameters..

Q. No.	Sub Q. N.	Answers	Marking Scheme
2		**Attempt any THREE of the following:**	**12- Total Marks**
	a)	**An RC series circuit consists of R = 10Ω and C = 200 µf.it is connected across 250 V, 50Hz, 1 ϕ AC. Calculate the value of power consumed by the circuit.**	**4M**
	Ans:		1M –Xc, 1M-Z,

		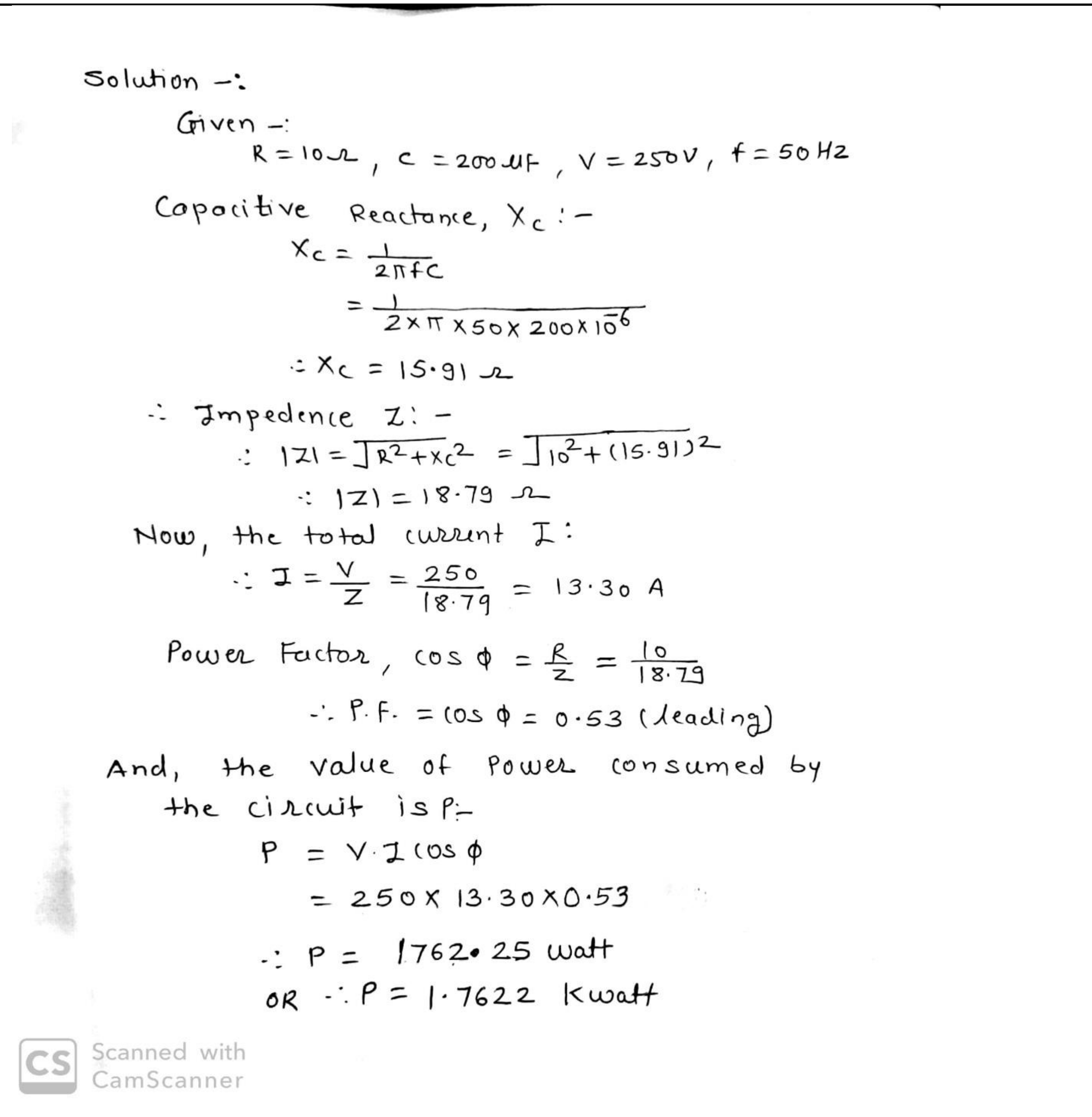Solution -: Given -: $R = 10\Omega$, $C = 200\,\mu F$, $V = 250V$, $f = 50\,Hz$ Capacitive Reactance, X_c :- $X_c = \frac{1}{2\pi f C}$ $= \frac{1}{2\times\pi\times 50\times 200\times 10^{-6}}$ $\therefore X_c = 15.91\,\Omega$ ∴ Impedence Z :- $\therefore \lvert Z\rvert = \sqrt{R^2+X_c^2} = \sqrt{10^2+(15.91)^2}$ $\therefore \lvert Z\rvert = 18.79\,\Omega$ Now, the total current I: $\therefore I = \frac{V}{Z} = \frac{250}{18.79} = 13.30\,A$ Power Factor, $\cos\phi = \frac{R}{Z} = \frac{10}{18.79}$ $\therefore$ P.F. $= \cos\phi = 0.53$ (leading) And, the value of Power consumed by the circuit is P:- $P = V\cdot I\cos\phi$ $= 250\times 13.30\times 0.53$ $\therefore P = 1762.25$ watt OR $\therefore P = 1.7622$ Kwatt 	1M-Power Factor, 1M-Power consumed
	b)	**Describe the procedure to tune the given electrical circuit using the principles of resonance.**	**4M**
	Ans:	An electrical circuit can be tuned to resonant frequency in any one of the following ways:	**4M**

		i)If the circuit parameters like resistance ,inductance and capacitance are of fixed value,the resonant frequency is calculated .Then by connecting a function generator, the input frequency can be varied till the circuit is tuned to the desired resonant frequency. ii)If the circuit is to be tuned to a particular frequency, and the frequency of the supply cannot be varied, then by using either a variable capacitor or variable inductor, the variable element can be varied till the circuit is tuned to the desired resonant frequency.	
	c)	**Find the current in 6Ω resistor in the circuit shown in Fig. No. 1 using mesh analysis.** 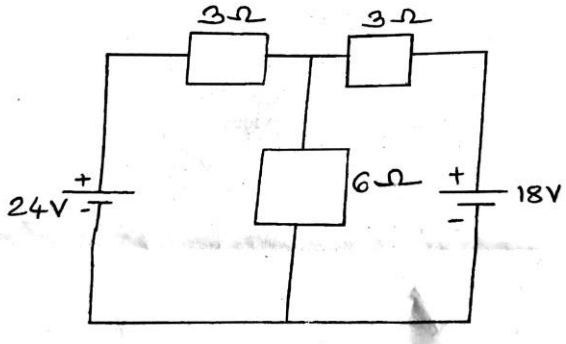 **Fig. No. 1**	**4M**

Ans:

Step 1 :- Name the nodes and identify the loops :-

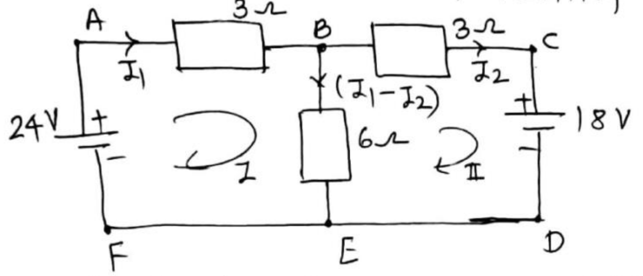

Step 2 :- Equation for loop I (A B E F A) :-

Apply KVL,

$$24 - 3I_1 - 6(I_1 - I_2) = 0$$
$$-3I_1 - 6I_1 + 6I_2 = -24$$
$$-9I_1 + 6I_2 = -24$$
$$\therefore 9I_1 - 6I_2 = 24 \quad \text{——— (1)}$$

Step 3 :- Equation for loop II (B C D E B) :-

$$-3I_2 - 18 - 6(I_2 - I_1) = 0$$
$$-3I_2 - 6I_2 + 6I_1 = 18$$
$$6I_1 - 9I_2 = 18 \quad \text{——— (2)}$$

Solving equation (1) and (2) by Determinant Method

$$D = \begin{vmatrix} 9 & -6 \\ 6 & -9 \end{vmatrix} = (-9)\times 9 - [(-6)\times 6]$$
$$= -81 + 36$$
$$\therefore D = -45$$

$$D_1 = \begin{bmatrix} 24 & -6 \\ 18 & -9 \end{bmatrix} = 24\times(-9) - [(-6)\times 18]$$
$$= -216 + 108$$
$$\therefore D_1 = -108$$

$$D_2 = \begin{bmatrix} 9 & 24 \\ 6 & 18 \end{bmatrix} = 9\times 18 - (24\times 6)$$
$$= 162 - 144$$
$$\therefore D_2 = 18$$

$$\therefore I_1 = \frac{D_1}{D} = \frac{-108}{-45} = 2.4\ A$$
$$I_2 = \frac{D_2}{D} = \frac{18}{-45} = -0.4\ A$$

$\therefore$ The current in 6Ω resistor is $(I_1 - I_2)$

$$= 2.4 - (-0.4)$$
$$= 2.8\ A$$

½ M- each equation

1M for I_1,

1M for I_2,

1M for current through 6 ohm resistor

	d)	**Find the value of R_L so that maximum power will transfer from source to it . also write equation for P_{MAX} (Fig. No. 2)** 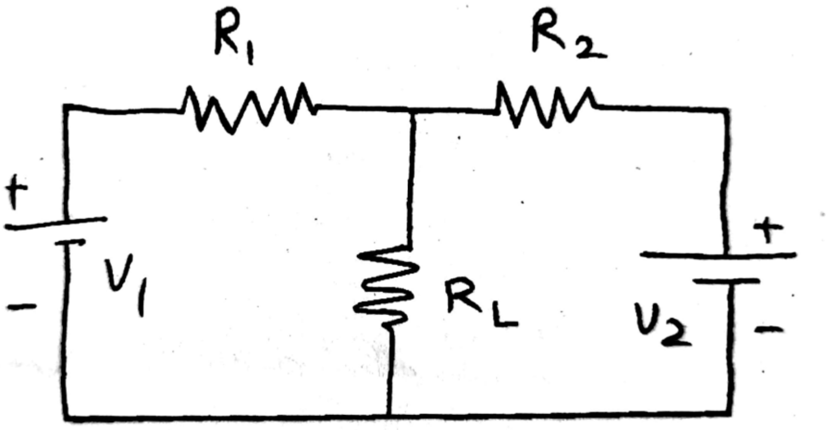 **Fig. No. 2**	**4M**

SUMMER– 19 EXAMINATION

Subject Name: Electric circuits and network **Model Answer** **Subject C** 22330

	Ans:	Replace the voltage sources V_1 and V_2 by short circuit to obtain the circuit shown below : 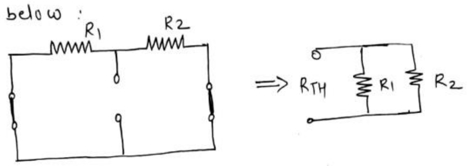 $\therefore R_{TH} = R_1 \ ||^{el}\ R_2$ $\therefore R_{TH} = \frac{R_1 \times R_2}{R_1 + R_2}$ But the condition for maximum power transfer to the load is - $R_L = R_{TH}$. ∴ The value of $R_L = R_{TH}$ so that maximum power will transfer from source to it. The equation for Pmax -: $P_{L(max)} = \left(\frac{V_{TH}}{R_{TH} + R_{TH}}\right)^2 \cdot R_{TH}$ substitute $R_L = R_{TH}$ ∴ Therefore the power transfer to the load is given by the equation $P_L = \frac{V_{TH}^2}{4R_{TH}}$	3M-for R_L 1M for power formula

Q. No.	Sub Q. N.	Answers	Marking Scheme
3		**Attempt any THREE of the following :**	**12- Total Marks**
	a)	**List the power factor improves technique and explain any one with advantage and disadvantage**	**4M**
	Ans:	**Power factor improvement techniques are** **i) Synchronous Motors (or capacitors)** **ii) Static Capacitors**	**2Marks for Listing Techniques**

iii) Phase Advancers

i) **Synchronous Motors (or capacitors) :** These machines draw leading kVAR when they are over-excited and, especially, when they are running idle. They are employed for correcting the power factor in bulk and have the special advantage that the amount of correction can be varied by changing their excitation.

ii) **Static Capacitors :** They are installed to improve the power factor of a group of a.c. motors and are practically loss-free (i.e. they draw a current leading in phase by 90°). Since their capacitance is not variable, they tend to over-compensate on light loads, unless arrangements for automatic switching of the capacitor bank are made.

iii) **Phase Advancers :** They are fitted with individual machines. However, it may be noted that the economical degree of correction to be applied in each case, depends upon the tariff arrangement between the consumers and the supply authorities.

2Marks for any one technique

b) Compare series resonance to parallel resonance on the basis of:

(i) Resonant frequency
(ii) Impedance
(iii) Current and
(iv) Magnification.

4M

Ans:

S.No.	Parameter	Series Circuit	Parallel Circuit
1	Resonant frequency	$f_r = \frac{1}{2\pi\sqrt{LC}}$	$f_r = \frac{1}{2\pi}\sqrt{\frac{1}{LC} - \frac{R^2}{L^2}}$
2	Impedance	Minimum, Z = R	Maximum, Z = L/CR
3	Current	Maximum, I = V/R	Minimum, I = V/(L/CR)

1 marks for each point

4	Magnification	Voltage magnification takes place	Current magnification takes place

	c)	**Write the procedure to convert voltage source into equivalent current source. Give its application. Draw neat diagrams of both the sources.**	4M
	Ans:	A voltage source with a series resistance can be converted into (or replaced by) and equivalent current source with a parallel resistance. The steps for converting practical voltage source into practical current source. i)Find the value of current supplied by the source when a 'short' is put across terminals A and B. Therefore, Current I=V/R ii)The value of resistance which is connected in parallel with the equivalent current source have the same value of series resistance(R_s=R_{sh}). ii)This equivalent current source is then connected in parallel with the shunt(parallel) resistance. 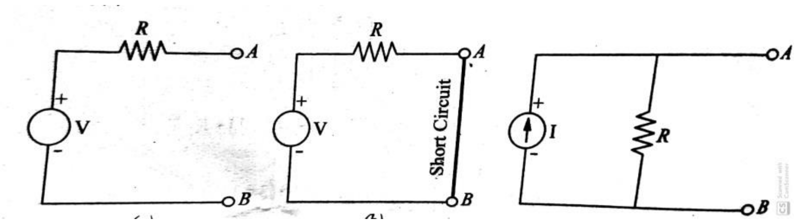 	2 marks for Procedure 1 mark for diagram

		Application : For the simplification and analysis of complex networks the transformation of voltage source to an equivalent current source or vice versa is often necessary.	**1 mark for Application**
	d)	**Find Norton's equivalent circuit of the Fig. shown (Fig. No. 3)** 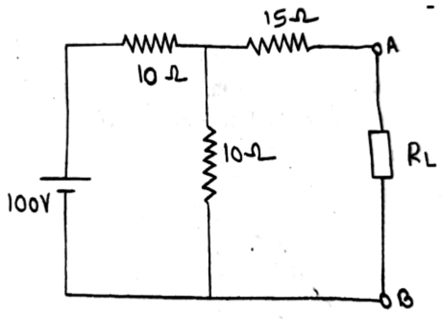 **Fig. No. 3**	**4M**
	Ans:		

3d)

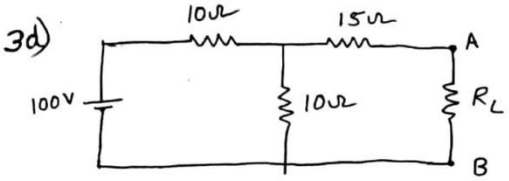

Circuit for I_{sc}

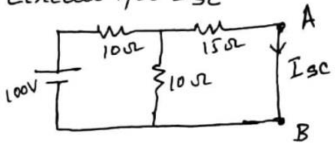

Step1: To obtain the value of I_{sc}:

The Total resistance R_T is given by

$$R_T = 10 + [10||15]$$

$$= 10 + \left[\frac{10 \times 15}{10+15}\right]$$

$$= 10 + 6 \quad = 16\,\Omega$$

The source current I is given by

$$I = \frac{V}{R_T} = \frac{100}{16} = \underline{6.25\,A}$$

The short circuit current I_{sc} is the current flowing through the 15Ω resistor

$$\therefore I_{sc} = I \times \frac{10}{10+15} \quad = 6.25 \times \frac{10}{25}$$

$$I_{sc} = \underline{2.5\,A}$$

2marks for obtaining Short circuit current

Step 2: TO obtain the value of R_{th}

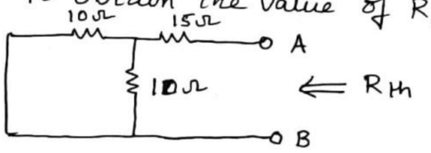

$$\therefore R_{th} = 15 + [10||10]$$

$$= 15 + 5 \quad = 20\,\Omega$$

1mark for R_{th}

Step 3:- Norton's equivalent circuit

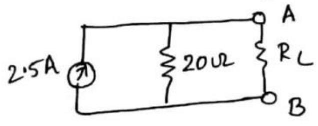

1mark for equivalent circuit

Q. No.	Sub Q. N.	Answers	Marking Scheme
4		**Attempt any THREE of the following :**	**12- Total Marks**
	(a)	**In a series circuit containing pure resistance pure inductance, the current and voltage are expressed as:** **I(t) = 5 sin (314t + 2 Π/3) and v(t) = 20 sin (314t + 5 Π/6)** **Find:** **(i) Impedance of circuit** **(ii) Resistance of circuit** **(iii) Inductance in circuit** **(iv) Average power drawn by circuit.**	**4M**
	Ans:	**I(t) = 5 sin (314t + 2 Π/3) and v(t) = 20 sin (314t + 5 Π/6)** **Converting the above standard sinusoidal forms into polar forms** **Rms values of current and voltage are** **I = 5/√2 = 3.54 A ; V = 20/√2 = 14.14 V** **Converting the above standard sinusoidal forms into polar forms** $\vec{I}$= (3.54$\angle$120°) A $\vec{V}$ = (14.14$\angle$150°) V **By Ohm's law,** **Circuit Impedance,** $\vec{Z}=\vec{V}/\vec{I}$ = (14.14$\angle$150°)/(3.54$\angle$120°) = (4$\angle$30°) Ω	**1 mark for Impedance**

		$=(3.46+j2)\ \Omega$ From polar form of Impedance i) Impedance of circuit = $Z = 4\ \Omega$ From Rectangular form of impedance ii) Resistance of circuit $R = Z \cos\phi = 4 \cos(30) = 3.46\ \Omega$ iii) Inductance of circuit L we know that $X_L = 2\ \Omega$ (from rectangular form of impedance) $X_L = 2\pi fL$ $L = X_L/2\pi f = 2/(2\pi\times 50) = 6.37\times 10^{-3}$ H From polar form of Impedance , $\phi=30°$ So, pf=$\cos\phi$ $=\cos 30°$ =0.866 lagging iv) Average power, $P=VI\cos\phi$ $= 14.14 \times 3.54 \times \cos 30°$ =43.35 W	1 mark for Resistance 1 mark for Inductance 1 mark for Average power
	(b)	Find I, I_1 ,I_2 power factor of the circuit in Fig. No. 4	4M

		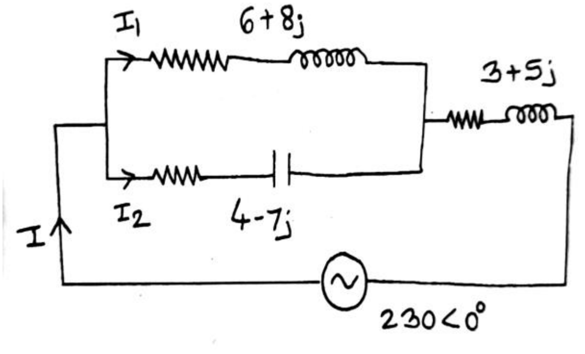 Fig. No. 4	
	Ans:		

SUMMER– 19 EXAMINATION

Subject Name: Electric circuits and network **Model Answer** **Subject C 22330**

4b)

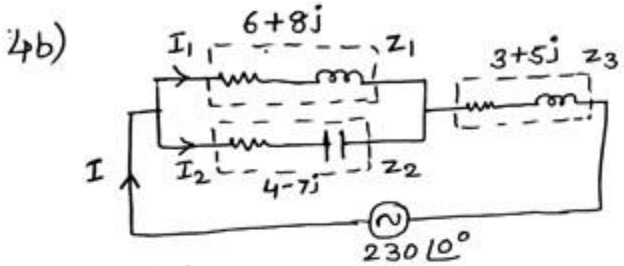

Sol Given: $Z_1 = 6+8j$, $Z_2 = 4-7j$, $Z_3 = 3+5j$, $V = 230\angle 0^\circ$

Total Impedance

$$Z = (Z_1 \| Z_2) + Z_3 = \frac{Z_1 Z_2}{Z_1+Z_2} + Z_3$$

$$\text{But } Z_1+Z_2 = 6+8j+4-7j$$
$$= 10+j$$
$$= 10\angle 5.71^\circ$$

Polar form of $Z_1 = (10\angle 53.13)$

" " $Z_2 = (8.06\angle -60.25)$

$$\therefore \frac{Z_1 Z_2}{Z_1+Z_2} = \frac{(10\angle 53.13)\times(8.06\angle -60.25)}{10\angle 5.71}$$
$$= \frac{80.6\angle -7.12}{10\angle 5.71} = 8.06\angle -12.83^\circ$$
$$= 7.85-1.78j$$

$$\therefore Z = 7.85-1.78j+3+5j$$
$$= 10.85+3.22j$$
$$= 11.31\angle 16.52^\circ$$

- Total current $I = \frac{V}{Z} = \frac{230\angle 0}{11.31\angle 16.52}$

$$\therefore I = 20.33\angle -16.52^\circ \text{ A}$$

- $I_1 = I \times \frac{Z_2}{Z_1+Z_2} = (20.33\angle -16.52)\,\frac{8.06\angle -60.25}{10\angle 5.71}$

$$= (20.33\angle -16.52)(0.806\angle -65.96)$$
$$I_1 = 16.38\angle -82.48^\circ \text{ A}$$

1mark for I

1mark for I_1

1mark for I_2

1mark for Power factor

		• $I_2 = I \times \frac{Z_1}{Z_1+Z_2} = (20.33\angle -16.52)\frac{(10\angle 53.13)}{(10\angle 5.71)}$ $= (20.33\angle -16.52)(1\angle 47.42)$ $\therefore \underline{I_2 = 20.33\angle 30.9^\circ \text{ A}}$ • power factor $= \cos\phi = \cos(-16.52)$ $= \underline{0.958 \text{ lagging}}$	
	(c)	**Explain the term bandwidth of a series resonant circuit. Derive its equation.**	**4M**
	Ans:	**Band width (BW) of a series resonance circuit is defined as the range of frequency over which circuit current is equal to or greater than $\frac{Ir}{\sqrt{2}}$ or 70.7 % of maximum current where I_0 or I_r = current at resonance.** **The resonance curve for a series RLC circuit is shown below:** 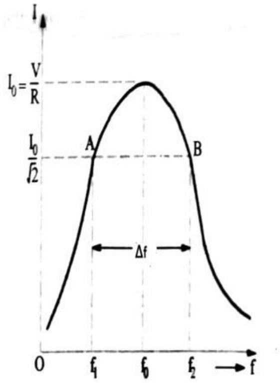 **From the graph it is clear that for all frequencies lying between f_1 and f_2 the circuit current is equal to or greater than 70.7 % of maximum current i.e.**	**Explanation 2 Marks**

		$I_r = V/R$ Thus Band width of the circuit, $BW = \Delta f = (f_2 - f_1)$ Hz Or $BW = \Delta\omega = (\omega_2 - \omega_1)$ rad/sec Derivation of equation for bandwidth - The relationship between bandwidth , Q factor and resonant frequency is given by $(f_2 - f_1) = f_r/Q_r$ Where $f_2 - f_1$= bandwidth, f_r =resonant frequency and Q_r = Q factor at resonance But $f_r = \frac{1}{2\pi\sqrt{LC}}$ And $Q_r = \frac{1}{R}\sqrt{\frac{L}{C}}$ Substituting these values in the equation for bandwidth, $\Delta f = f_r / Q_r = \frac{\frac{1}{2\pi\sqrt{LC}}}{\frac{1}{R}\sqrt{\frac{L}{C}}} = \frac{R\sqrt{C}}{2\pi\sqrt{CL^2}} = \frac{R}{2\pi L}$ Hz Therefore bandwidth $\Delta f = f_2 - f_1 = \frac{R}{2\pi L}$ Hz OR $\Delta\omega = 2\pi\,\Delta f = \frac{R}{L}$ rad/sec	2marks for Derivation

	(d)	**A bridge network ABCD has arms AB, BC, CD and DA of resistances 1, 1,2 and 1 ohm respectively . If the detector AC has a resistance of 1 ohm, determine by star/delta transformation, the network resistance as viewed from the battery terminals.** 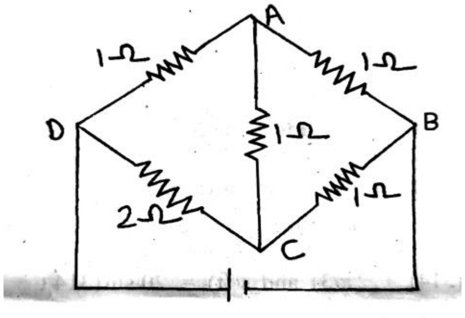 **Fig. No. 5**	**4M**
	Ans:		**2 marks for Converting delta to star** **2 marks for Network resistance**

4d)

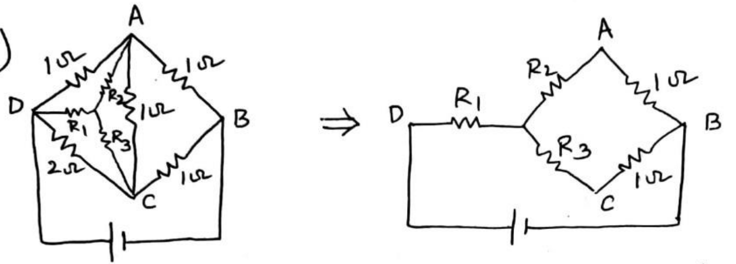

Step 1: Converting the delta formed by ACD into Equivalent star network.

(ie) Δ ACD ⇒ Y ACD

$$\therefore R_1 = \frac{1 \times 2}{1+2+1} = \frac{2}{4} = 0.5\Omega$$

$$R_2 = \frac{1 \times 1}{1+2+1} = \frac{1}{4} = 0.25\Omega$$

$$R_3 = \frac{1 \times 2}{1+2+1} = \frac{2}{4} = 0.5\Omega$$

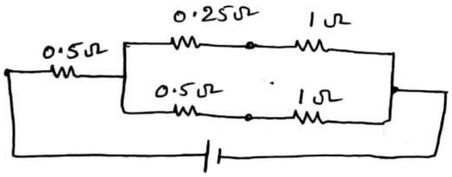

The above circuit is converted as

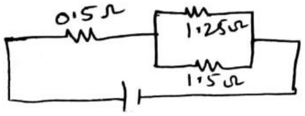

Here 1.28Ω & 1.5Ω are in parallel
[1.25 || 1.5] = 0.68

$\therefore$ network resistance = $\underline{1.18\Omega}$

Note: The problem can be done by converting delta ABC into equivalent star also.

(e)	**Find current through 6Ω resistor using superposition theorem. Fig. No. 6**	**4M**

		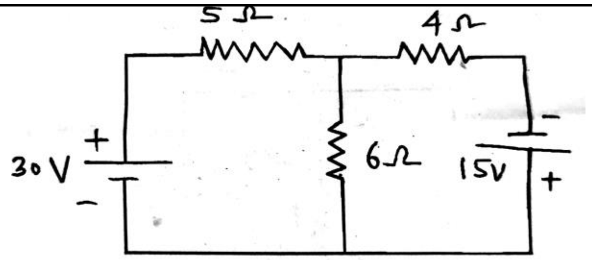 **Fig. No. 6**	
	Ans:		**1mark for R_T**

4e) Replace the 15V source by a short circuit, Keeping 30V

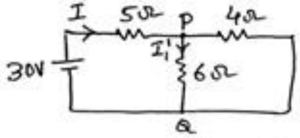

Resistor 6Ω & 4Ω are parallel

$\therefore 6 \| 4 = 2.4\Omega$

1mark for I'₁

→ current through 6Ω Resistor due to 30V source ie I_1'

Resistor 5Ω & 2.4Ω are in series

ToTal Resistance

$R_T = 5 + 2.4 = 7.4\Omega$

$R_T = 7.4\Omega$

$\therefore$ Total current $I = \frac{30}{7.4} = 4.05A$

$\therefore I_1' = I \times \frac{4}{4+6} = 4.05 \times \frac{4}{10} = \underline{1.62A}$

→ current through 6Ω Resistor due to 15V source ie I_1''

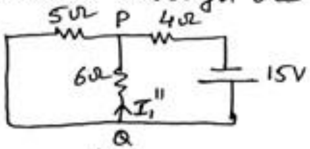

Resistor 5Ω & 6Ω are in parallel

$\therefore 5 \| 6 = \frac{30}{11} = 2.72\Omega$

1mark for I''₁

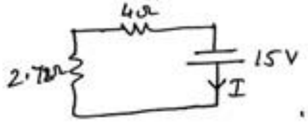

Resistor 2.72Ω & 4Ω are in serie

$\therefore$ Total Resistance is

$R_T = 2.72 + 4 = 6.72\Omega$

$\therefore$ Total current $I = \frac{V}{R_T} = \frac{15}{6.72} = 2.23A$

1mark for I₆Ω

$\therefore I_1'' = I \times \frac{5}{5+6} = 2.23 \times \frac{5}{11}$

$I_1'' = -1.01A$ (As current is flowing from Q to P we will consider it to be negative)

$\therefore$ Total current in 6Ω Resistor is (from P to Q)

$I_1' + I_1''$

$= 1.62 - 1.01$

$I_{6\Omega} = 0.61A$

Q. No.	Sub Q. N.	Answers	Marking Scheme
5.		**Attempt any TWO of the following:**	**12- Total Marks**
	a)	**A coil of resistance 20 Ω and 200 µH is in parallel with a variable capacitor. The voltage of the supply is 20 V at a frequency of 10^6 Hz . Calculate :** **(i) The value of C to give resonance.** **(ii) The Q of the coil.** **(iii) The current in each branch of the circuit at resonance.**	**6M**

Ans:

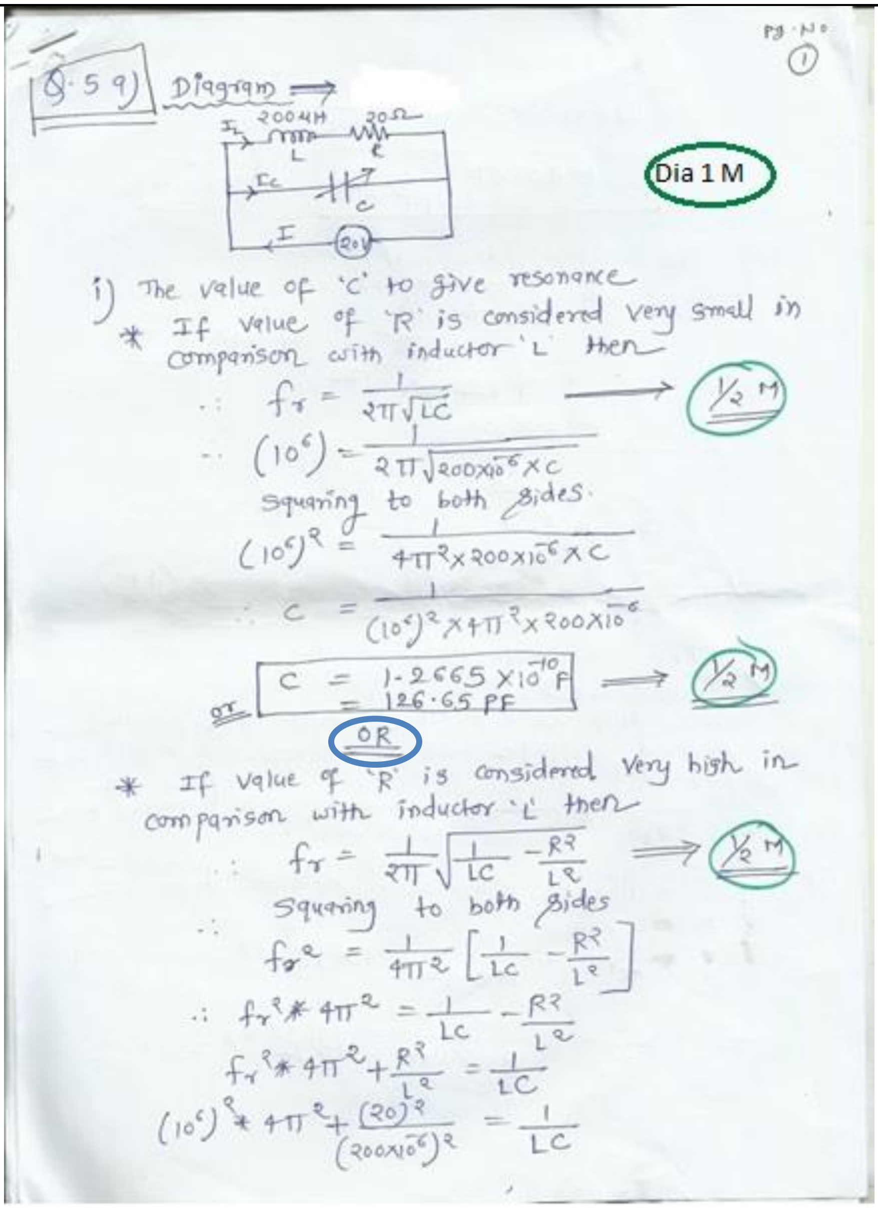

Pg. No. ①

Q. 5 a) Diagram ⟹

Dia 1 M

i) The value of 'C' to give resonance

* If value of 'R' is considered very small in comparison with inductor 'L' then

$$\therefore f_r = \frac{1}{2\pi\sqrt{LC}} \longrightarrow \frac{1}{2}M$$

$$\therefore (10^6) = \frac{1}{2\pi\sqrt{200\times10^{-6}\times C}}$$

squaring to both sides.

$$(10^6)^2 = \frac{1}{4\pi^2\times200\times10^{-6}\times C}$$

$$\therefore C = \frac{1}{(10^6)^2\times4\pi^2\times200\times10^{-6}}$$

or $\boxed{\begin{aligned} C &= 1.2665\times10^{-10}F \\ &= 126.65\,pF \end{aligned}} \Longrightarrow \frac{1}{2}M$

OR

* If value of 'R' is considered very high in comparison with inductor 'L' then

$$\therefore f_r = \frac{1}{2\pi}\sqrt{\frac{1}{LC}-\frac{R^2}{L^2}} \Longrightarrow \frac{1}{2}M$$

$\therefore$ squaring to both sides

$$f_r^2 = \frac{1}{4\pi^2}\left[\frac{1}{LC}-\frac{R^2}{L^2}\right]$$

$$\therefore f_r^2 * 4\pi^2 = \frac{1}{LC}-\frac{R^2}{L^2}$$

$$f_r^2 * 4\pi^2+\frac{R^2}{L^2} = \frac{1}{LC}$$

$$(10^6)^2 * 4\pi^2+\frac{(20)^2}{(200\times10^{-6})^2} = \frac{1}{LC}$$

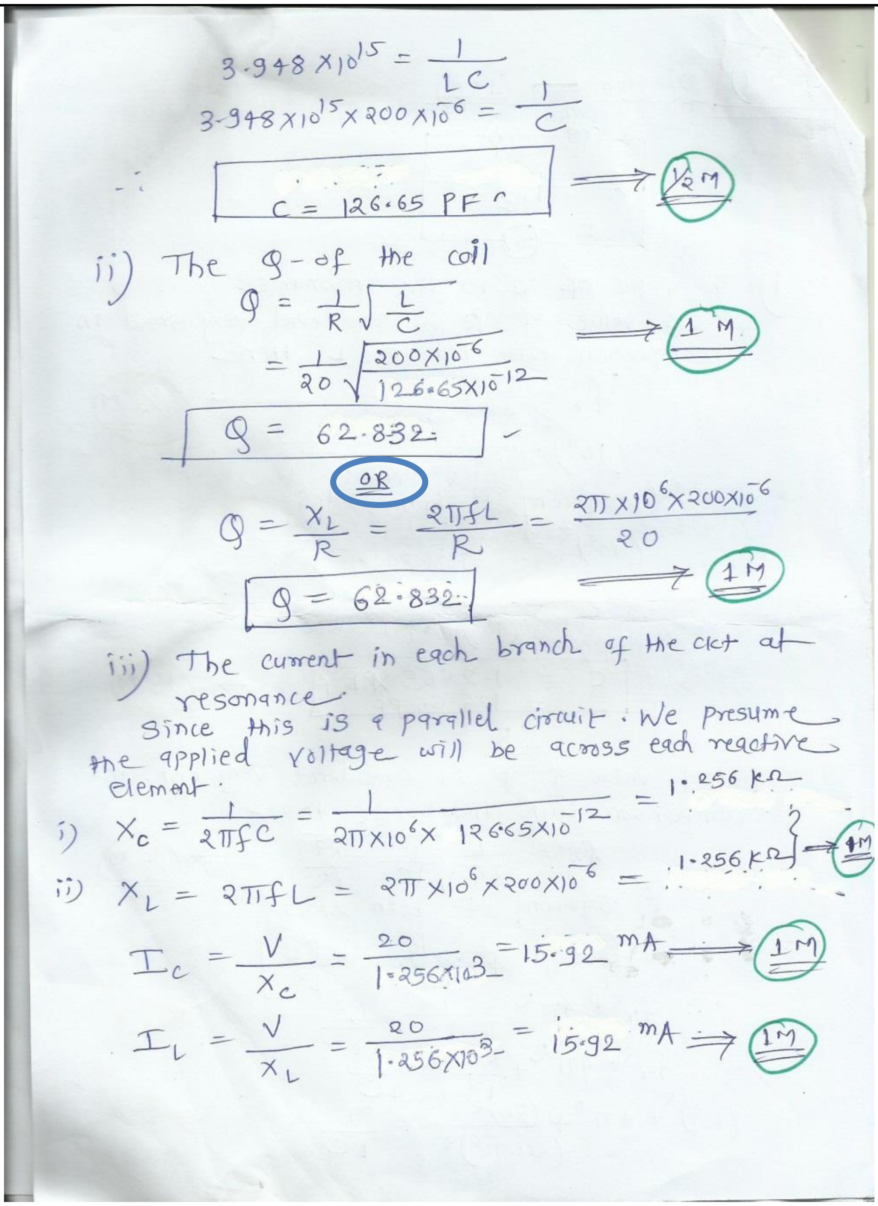

$$3.948 \times 10^{15} = \frac{1}{LC}$$

$$3.948 \times 10^{15} \times 200 \times 10^{-6} = \frac{1}{C}$$

$$\therefore \boxed{C = 126.65\ PF} \Longrightarrow ½M$$

ii) The Q-of the coil

$$Q = \frac{1}{R}\sqrt{\frac{L}{C}}$$

$$= \frac{1}{20}\sqrt{\frac{200 \times 10^{-6}}{126.65 \times 10^{-12}}} \Longrightarrow 1\ M.$$

$$\boxed{Q = 62.832}$$

OR

$$Q = \frac{X_L}{R} = \frac{2\pi f L}{R} = \frac{2\pi \times 10^6 \times 200 \times 10^{-6}}{20}$$

$$\boxed{Q = 62.832} \Longrightarrow 1M$$

iii) The current in each branch of the ckt at resonance.

Since this is a parallel circuit. We presume the applied voltage will be across each reactive element.

$$\text{i)}\ X_C = \frac{1}{2\pi f C} = \frac{1}{2\pi \times 10^6 \times 126.65 \times 10^{-12}} = 1.256\ k\Omega$$

$$\text{ii)}\ X_L = 2\pi f L = 2\pi \times 10^6 \times 200 \times 10^{-6} = 1.256\ k\Omega \Big\} \rightarrow 1M$$

$$I_C = \frac{V}{X_C} = \frac{20}{1.256 \times 10^3} = 15.92\ mA \Longrightarrow 1M$$

$$I_L = \frac{V}{X_L} = \frac{20}{1.256 \times 10^3} = 15.92\ mA \Longrightarrow 1M$$

b)	**Find current through impedance 3 + j5 using superposition theorem in the circuit as shown in Fig. No. 7.**	**6M**

		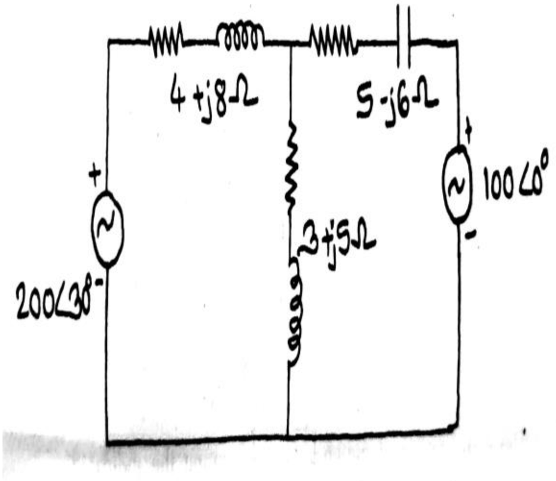 Fig. No. 7	

Ans:

pg ②

Q.5 b)

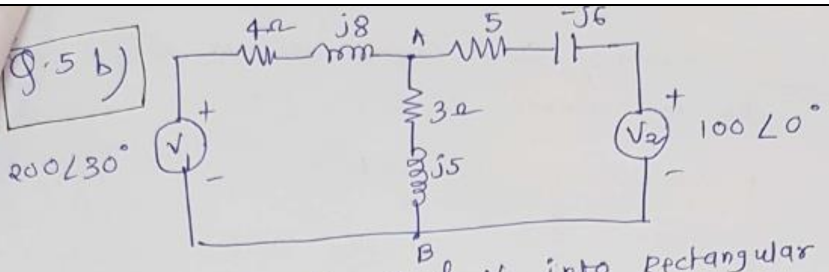

Step 1 :- convert V_1 & V_2 into Rectangular form

$V_1 = 200\angle 30° = 173.21 + j100$

$V_2 = 100\angle 0° = 100 + j0$

find the current th^r Branch 'AB' as I_1' due to source $V_1 = 200\angle 30°$

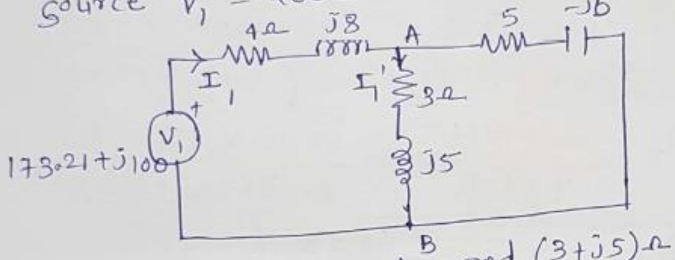

⇒ 2 Mark

The impedances $(5-j6)\Omega$ and $(3+j5)\Omega$ are in parallel and this combination is in series with $(4+j8)\Omega$

$$R_{Th} = \frac{(5-j6)*(3+j5)}{(5-j6)+(3+j5)} = \frac{15+j25-j8+30}{(8-j1)}$$

$$= \frac{45+j7}{8-j1} = \frac{45.54\angle 8.842}{8.062\angle -7.13}$$

$$\boxed{R_{Th} = 5.65\angle 15.97}$$

$$I_1 = \frac{200\angle 30°}{5.65\angle 15.97}$$

$$\boxed{\therefore I_1 = 35.398\angle -14.03°}$$

$$I_1' = \frac{(5-j6)}{(5-j5)+(3+j5)} * I_1 = \frac{5-j6}{(8-j1)} * 35.398\angle -14.03°$$

$$= \frac{7.810\angle -50.19}{8.062\angle -7.13} * 35.398\angle -14.03$$

$$\boxed{I_1' = 34.28\angle -57.09°}$$

Scanned by CamScanner

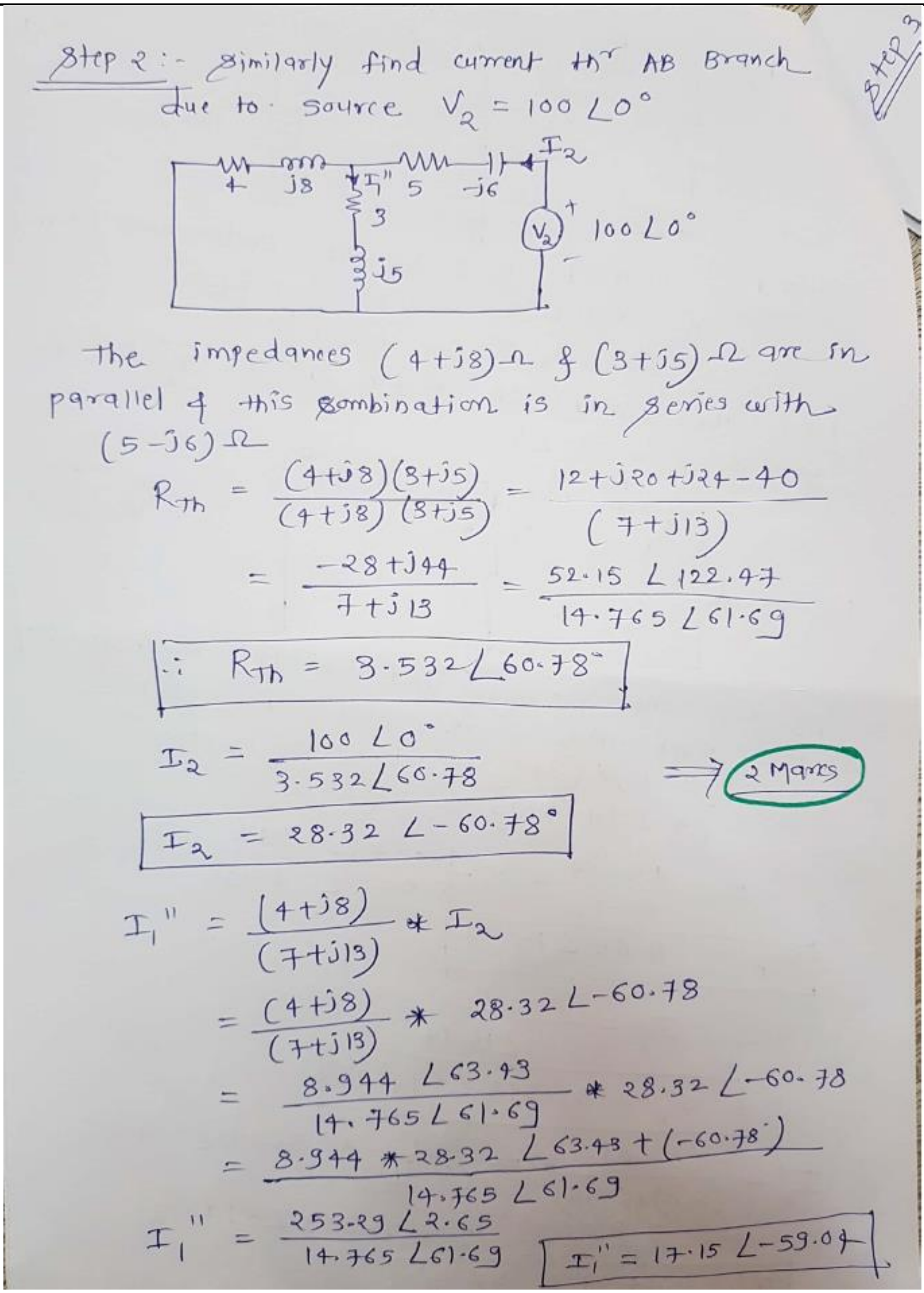

Step 2 :- Similarly find current thr AB Branch due to source $V_2 = 100\angle 0°$

Step 3

The impedances $(4+j8)\Omega$ & $(3+j5)\Omega$ are in parallel & this combination is in series with $(5-j6)\Omega$

$$R_{Th} = \frac{(4+j8)(3+j5)}{(4+j8)(3+j5)} = \frac{12+j20+j24-40}{(7+j13)}$$

$$= \frac{-28+j44}{7+j13} = \frac{52.15\angle 122.47}{14.765\angle 61.69}$$

$$\boxed{\therefore R_{Th} = 3.532\angle 60.78°}$$

$$I_2 = \frac{100\angle 0°}{3.532\angle 60.78} \Rightarrow \text{2 Marks}$$

$$\boxed{I_2 = 28.32\angle -60.78°}$$

$$I_1'' = \frac{(4+j8)}{(7+j13)} * I_2$$

$$= \frac{(4+j8)}{(7+j13)} * 28.32\angle -60.78$$

$$= \frac{8.944\angle 63.43}{14.765\angle 61.69} * 28.32\angle -60.78$$

$$= \frac{8.944 * 28.32\angle 63.43+(-60.78°)}{14.765\angle 61.69}$$

$$I_1'' = \frac{253.29\angle 2.65}{14.765\angle 61.69} \quad \boxed{I_1'' = 17.15\angle -59.04}$$

		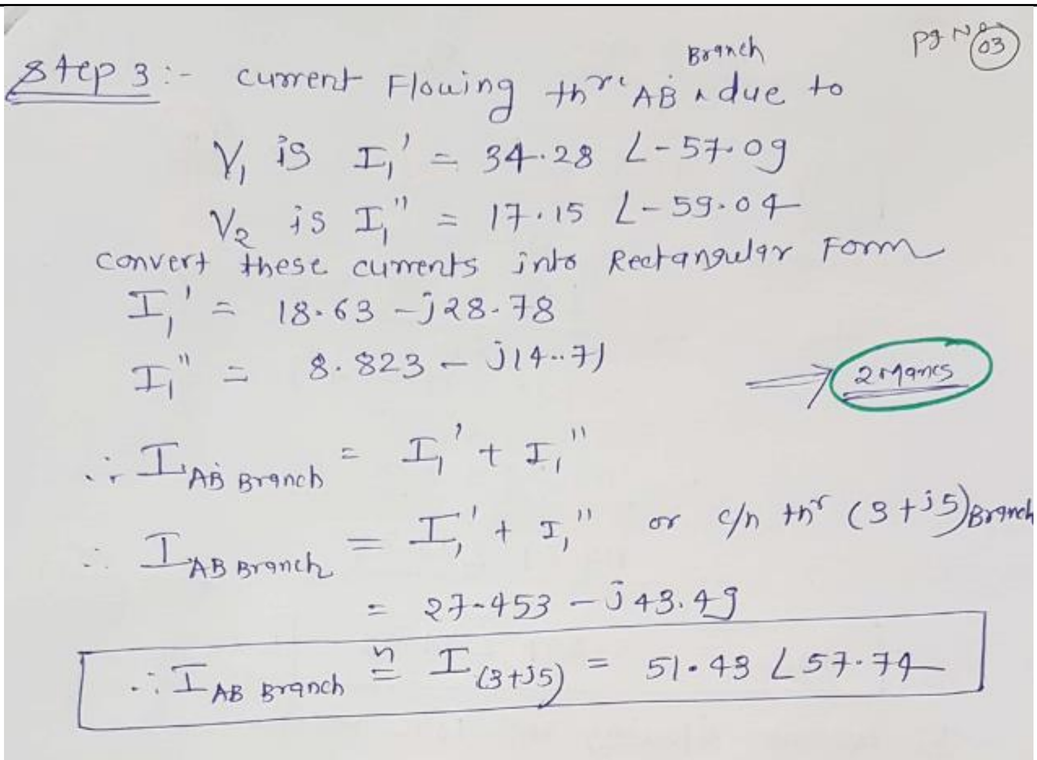Pg N (03) Step 3 :- current Flowing thr' AB Branch due to V_1 is $I_1' = 34.28 \angle -57.09$ V_2 is $I_1'' = 17.15 \angle -59.04$ convert these currents into Rectangular Form $I_1' = 18.63 - j28.78$ $I_1'' = 8.823 - j14.71$ → 2 Marks $\therefore I_{AB\ Branch} = I_1' + I_1''$ $\therefore I_{AB\ Branch} = I_1' + I_1''$ or c/n thr $(3+j5)$ Branch $= 27.453 - j43.49$ $\boxed{\therefore I_{AB\ Branch} \overset{n}{=} I_{(3+j5)} = 51.43 \angle 57.74}$	
	c)	**Sketch the phasor diagram for the nominal drawn circuit with justification of each phasor drawn.**	**6M**
	Ans:	**Consider series R-L circuit** 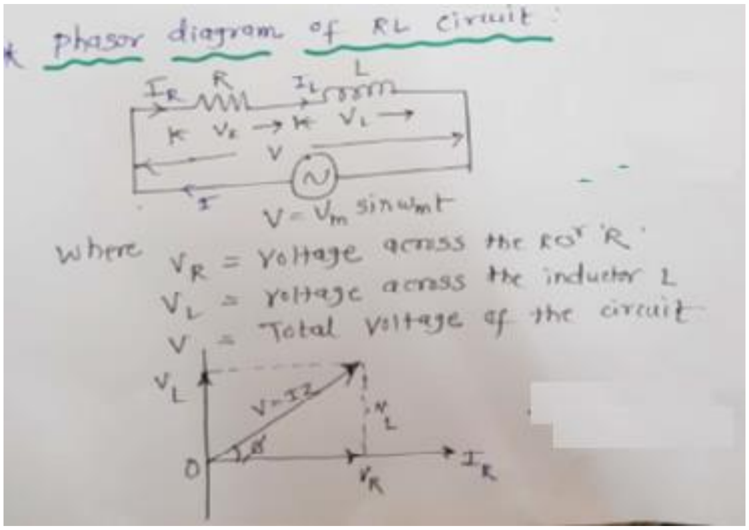 phasor diagram of RL circuit : $V = V_m \sin \omega m t$ where V_R = Voltage across the Res^r 'R' V_L = voltage across the inductor L V = Total voltage of the circuit 	**Circuit diagram : 1 Mark** **Phasor diagram : 3 Marks**

		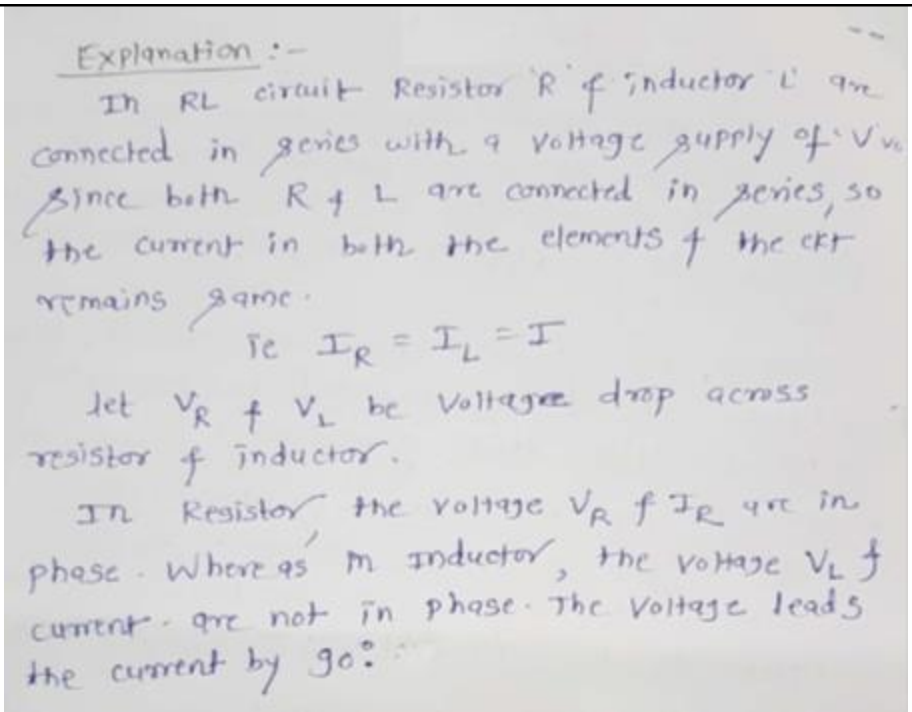 Explanation :- In RL circuit Resistor 'R' & inductor 'L' are connected in series with a voltage supply of 'V'. Since both R & L are connected in series, so the current in both the elements & the ckt remains same. ie $I_R = I_L = I$ let V_R & V_L be voltage drop across resistor & inductor. In Resistor the voltage V_R & I_R are in phase. Where as in inductor, the voltage V_L & current are not in phase. The voltage leads the current by 90°. **Note: If the student has attempted to solve the question considering any one of the following circuits : Series R-C or R-L-C circuit or Parallel R-L or R-C or R-L-C circuit, give appropriate marks.**	**Explanation :2Marks**

Q. No.	Sub Q. N.	Answers	Marking Scheme
6.		**Attempt any TWO of the following :**	**12- Total Marks**
	a)	**Use nodal analysis to calculate the current flowing in each branch of the network shown in Fig. No. 8** 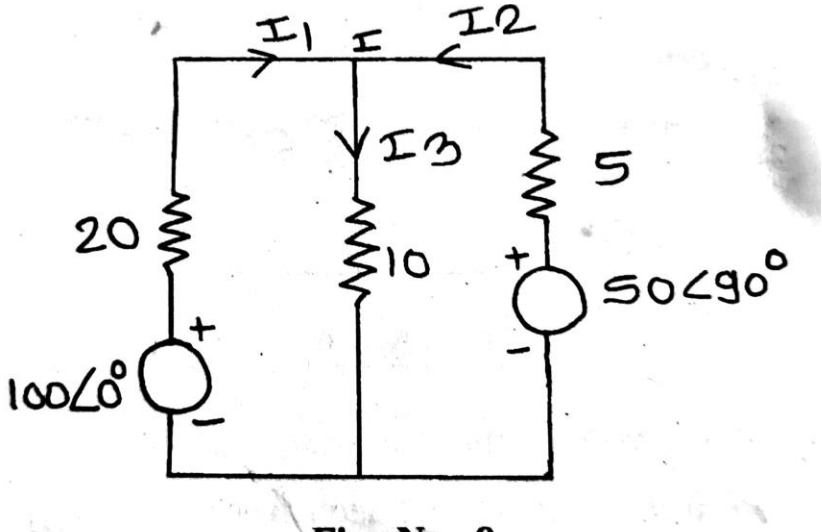 **Fig. No. 8**	**6M**

Ans:

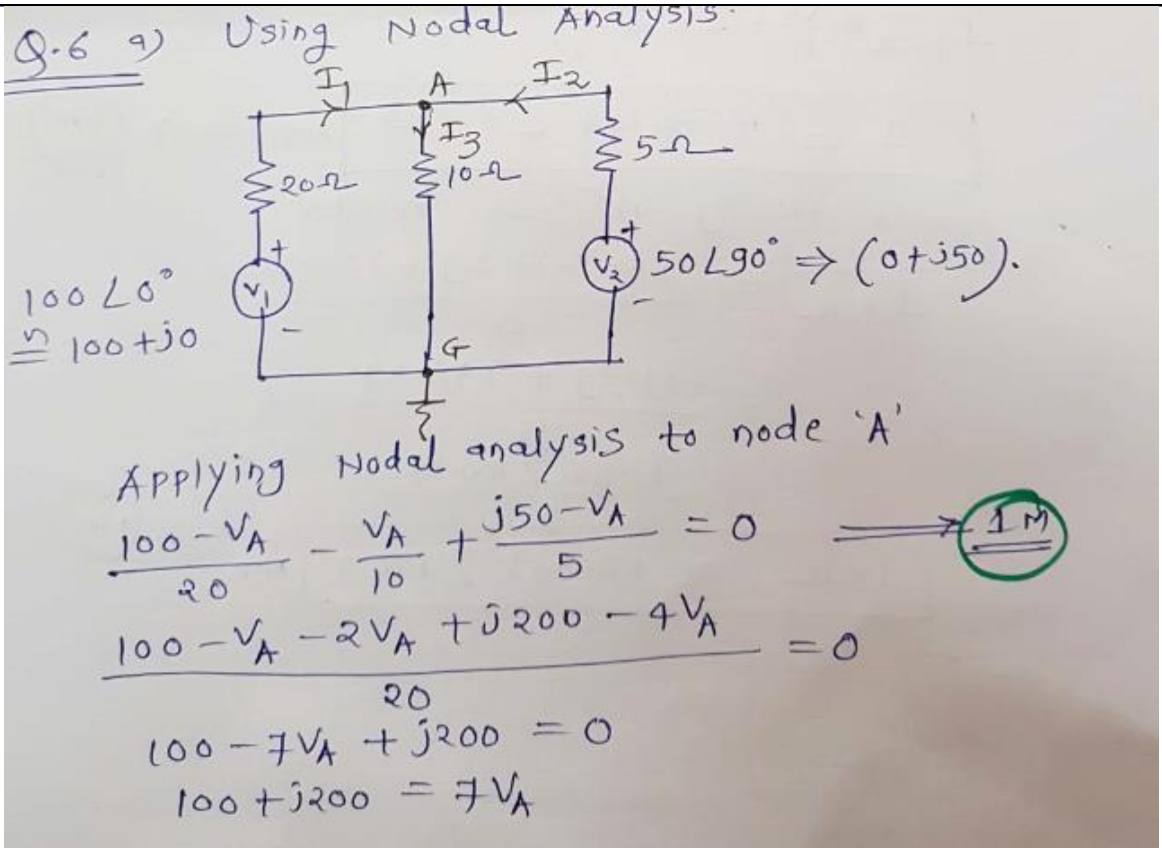

Q.6 a) Using Nodal Analysis.

100∠0° ≅ 100+j0

50∠90° ⇒ (0+j50).

Applying Nodal analysis to node 'A'

$$\frac{100-V_A}{20} - \frac{V_A}{10} + \frac{j50-V_A}{5} = 0 \Longrightarrow 1M$$

$$\frac{100 - V_A - 2V_A + j200 - 4V_A}{20} = 0$$

$$100 - 7V_A + j200 = 0$$

$$100 + j200 = 7V_A$$

		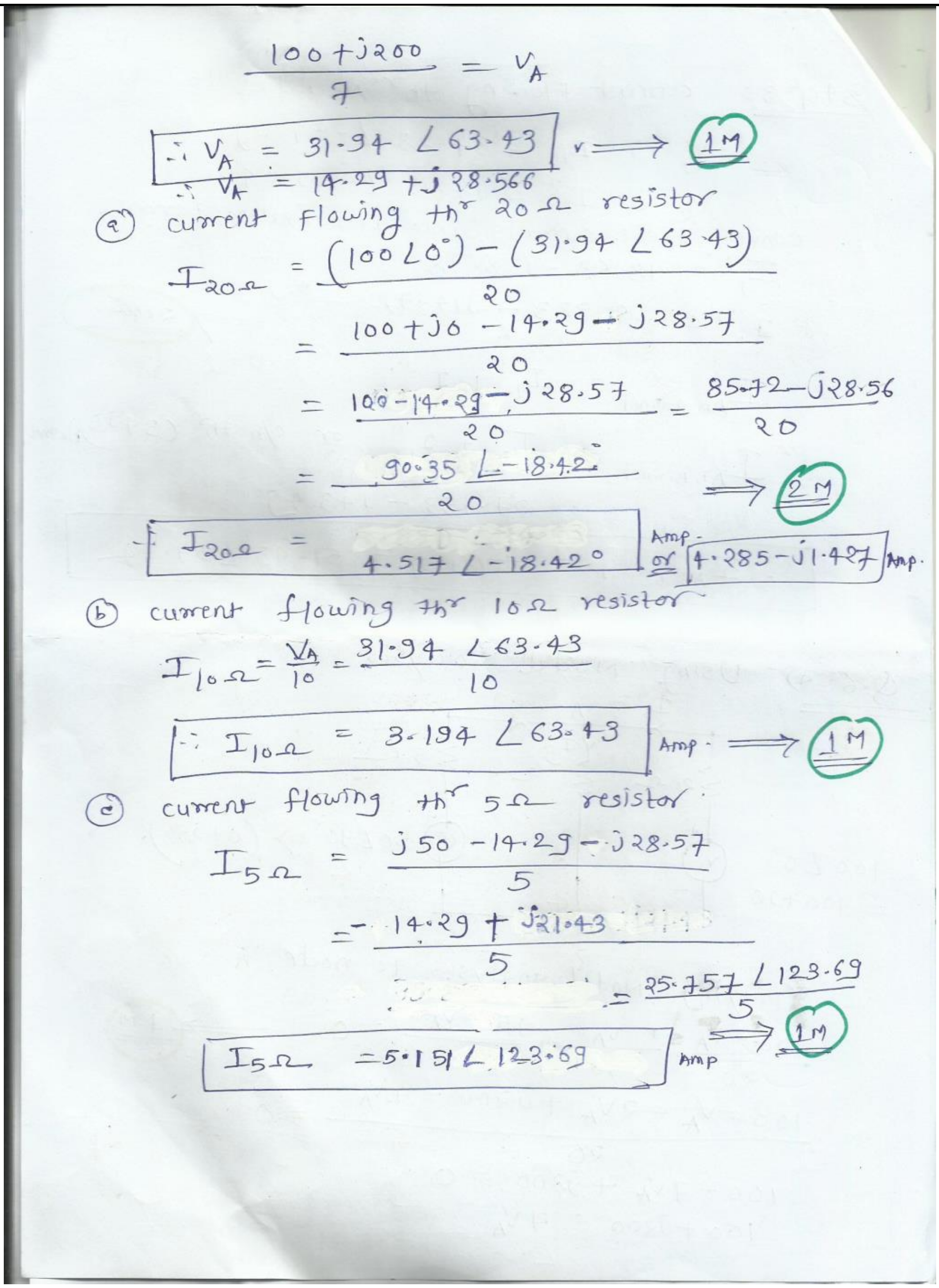 $\frac{100+j200}{7} = V_A$ $\boxed{\therefore V_A = 31.94 \angle 63.43}$ v $\Longrightarrow$ 1M $\therefore V_A = 14.29 + j28.566$ ⓐ current Flowing thr 20 Ω resistor $I_{20\Omega} = \frac{(100 \angle 0°) - (31.94 \angle 63.43)}{20}$ $= \frac{100 + j0 - 14.29 - j28.57}{20}$ $= \frac{100 - 14.29 - j28.57}{20} = \frac{85.72 - j28.56}{20}$ $= \frac{90.35 \angle -18.42°}{20} \Longrightarrow$ 2M $\boxed{\therefore I_{20\Omega} = 4.517 \angle -18.42°}$ Amp. or $\boxed{4.285 - j1.427}$ Amp. ⓑ current flowing thr 10 Ω resistor $I_{10\Omega} = \frac{V_A}{10} = \frac{31.94 \angle 63.43}{10}$ $\boxed{\therefore I_{10\Omega} = 3.194 \angle 63.43}$ Amp. $\Longrightarrow$ 1M ⓒ current flowing thr 5 Ω resistor $I_{5\Omega} = \frac{j50 - 14.29 - j28.57}{5}$ $= \frac{-14.29 + j21.43}{5}$ $= \frac{25.757 \angle 123.69}{5}$ $\boxed{I_{5\Omega} = 5.151 \angle 123.69}$ Amp $\Longrightarrow$ 1M	
	b)	**Verify the reciprocity theorem in the circuit given in Fig. No. 9**	**6M**

		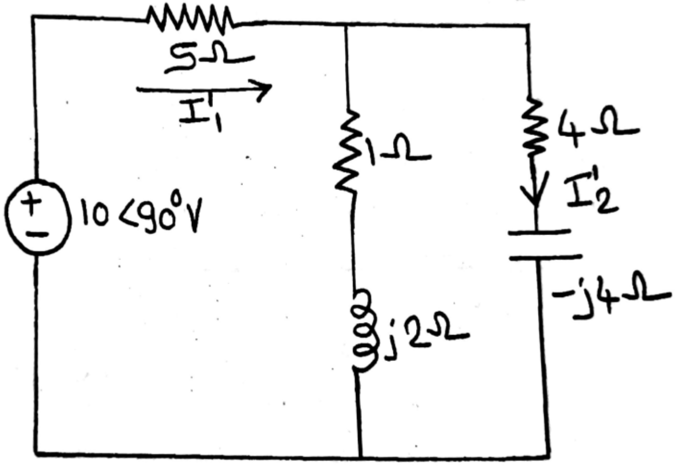 **Fig. No. 9**	
	Ans:		

Pg. No. 9

Q6 b)

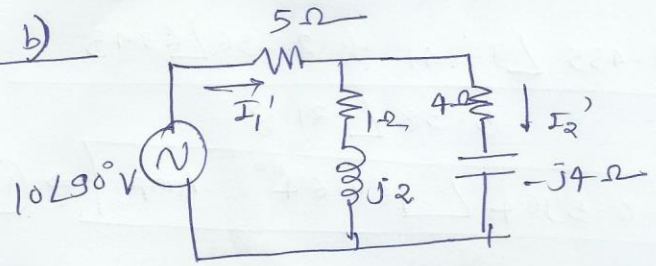

Case: 1
Step 1 :- consider the given circuit as it is

$$Z_{eq} = 5+[(1+j2)] \text{ IIel } [(4-j4)]$$

$$= 5+\frac{[(1+j2)(4-j4)]}{1+j2+4-j4}$$

$$= 5+\frac{(4-j4+j8+8)}{5-j2}$$

$$= 5+\frac{12+j4}{5-j2}$$

$$= \frac{25-j10+12+j4}{(5-j2)}$$

$$= \frac{37-j6}{5-j2} = \frac{37.48\angle-9.21}{5.38\angle-21.8}$$

$$\boxed{Z_{eq.} = 6.966\angle12.59\ \Omega} \rightarrow (1M)$$

$$I_1' = \frac{10\angle90^\circ}{6.966\angle12.59} = 1.435\angle+77.41 \text{ Amp.}$$

$\Longrightarrow$ (1M)

using c/n division rule,

$$I_2' = 1.435\angle77.41 * \frac{(1+j2)}{1+j2+4-j4}$$

$$= \frac{1.435\angle77.41 * (1+j2)}{5-j2}$$

$$= \frac{1.435 \angle 77.41 * 2.236 \angle 63.43}{5.38 \angle -21.8}$$

$$\boxed{I_2' = 0.5964 \angle 162.64^\circ \text{ Amp}} \Rightarrow \text{(1M)}$$

<u>case 2:</u> change the position of voltage source

Step 1:- & calculate currents.

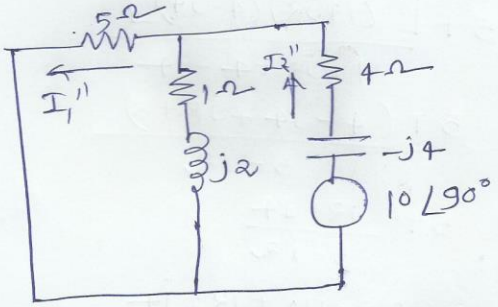

$$Z_{eq}' = \frac{5+j10}{6+j2} + (4-j4)$$

$$= \frac{11.18 \angle 63.43}{6.32 \angle 18.43} + (4-j4)$$

$$= (1.718 \angle 45) + (4-j4)$$

$$= 1.25 + j1.25 + 4 - j4$$

$$= 5.25 - j2.75$$

$$\boxed{Z_{eq}' = 5.926 \angle -27.64 \; \Omega} \Rightarrow \text{(1M)}$$

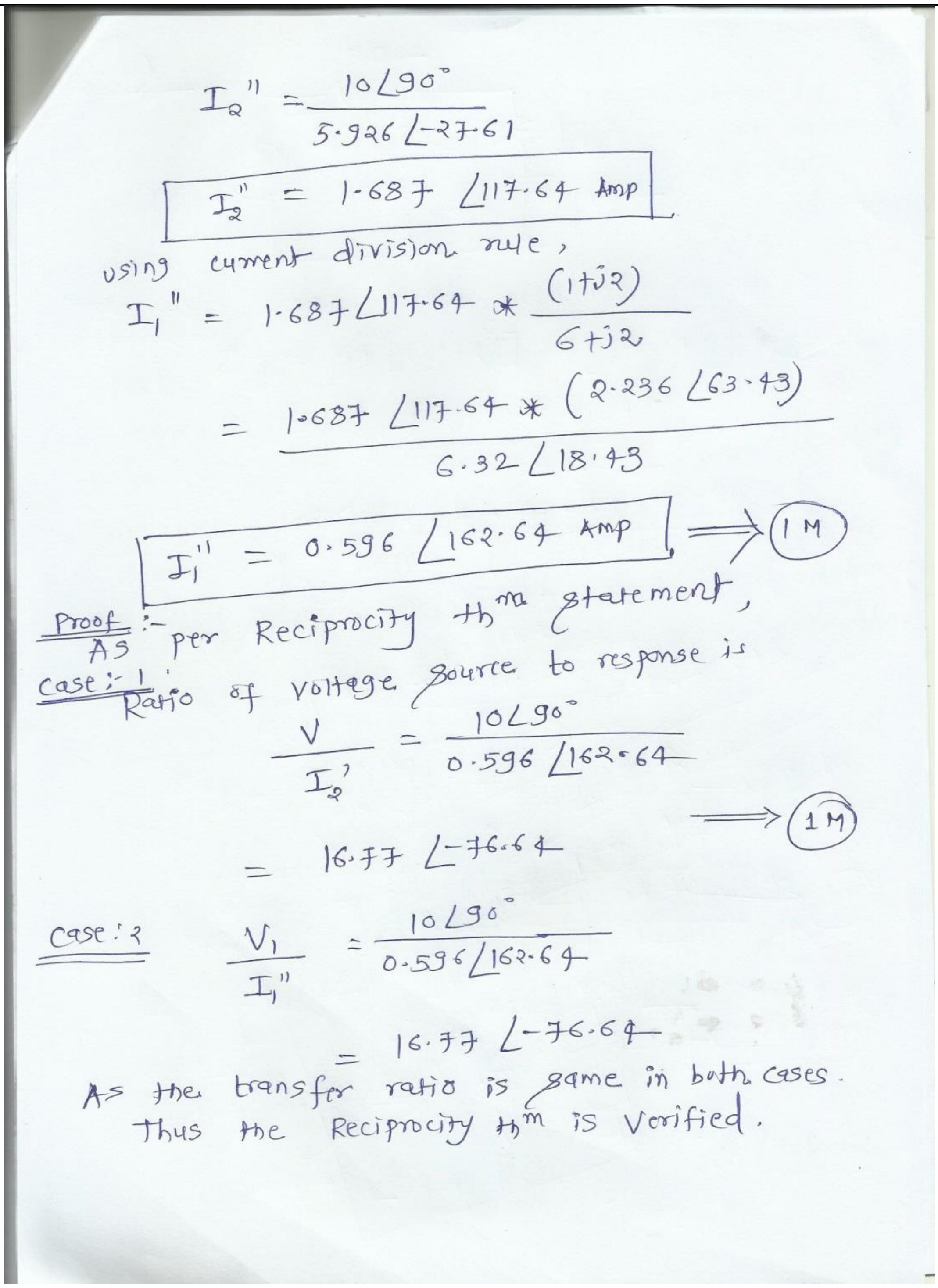

$$I_2'' = \frac{10\angle 90^\circ}{5.926\angle -27.61}$$

$$\boxed{I_2'' = 1.687\ \angle 117.64\ \text{Amp}}$$

using current division rule,

$$I_1'' = 1.687\angle 117.64 * \frac{(1+j2)}{6+j2}$$

$$= \frac{1.687\ \angle 117.64 * (2.236\ \angle 63.43)}{6.32\ \angle 18.43}$$

$$\boxed{I_1'' = 0.596\ \angle 162.64\ \text{Amp}} \Longrightarrow \text{(1 M)}$$

Proof :- As per Reciprocity th^m statement,

Case :- 1 : Ratio of voltage source to response is

$$\frac{V}{I_2'} = \frac{10\angle 90^\circ}{0.596\ \angle 162.64} \Longrightarrow \text{(1M)}$$

$$= 16.77\ \angle -76.64$$

Case : 2

$$\frac{V_1}{I_1''} = \frac{10\angle 90^\circ}{0.596\angle 162.64}$$

$$= 16.77\ \angle -76.64$$

As the transfer ratio is same in both cases. Thus the Reciprocity th^m is verified.

	c)	**Draw the two port network and determine the indicated parameters for the following configurations:** **(i) Cascade configurations (ABCD parameter)** **(ii) Series configurations** **(iii) Parallel configurations.**	**6M**

Ans:

Cascade configuration ABCD parameter :-

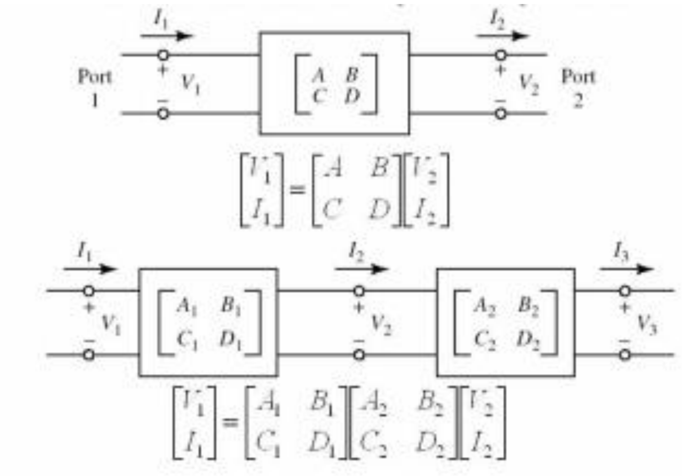

$$\begin{bmatrix} V_1 \\ I_1 \end{bmatrix} = \begin{bmatrix} A & B \\ C & D \end{bmatrix} \begin{bmatrix} V_2 \\ I_2 \end{bmatrix}$$

$$\begin{bmatrix} V_1 \\ I_1 \end{bmatrix} = \begin{bmatrix} A_1 & B_1 \\ C_1 & D_1 \end{bmatrix} \begin{bmatrix} A_2 & B_2 \\ C_2 & D_2 \end{bmatrix} \begin{bmatrix} V_2 \\ I_2 \end{bmatrix}$$

OR

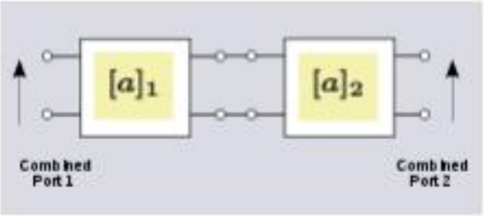

1 mark for the diagram and 1 mark for equation for each configuration

Series configurations:-

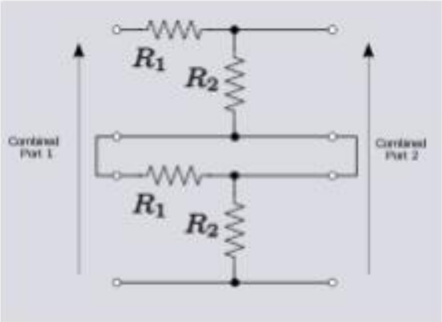

OR

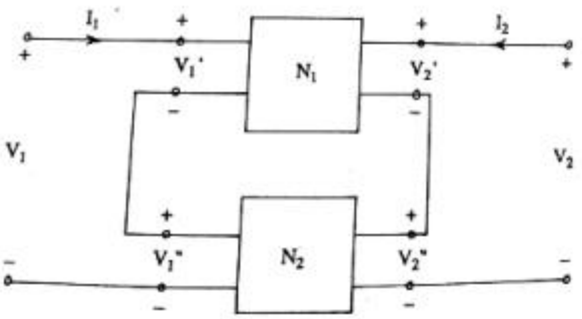

Where N1 and N2 are two port Network

$$[Z] = [Z_1] + [Z_2]$$

The Z parameter equation can be written as below

$$\begin{bmatrix} V_1 \\ V_2 \end{bmatrix} = \begin{bmatrix} z_{11} & z_{12} \\ z_{21} & z_{22} \end{bmatrix} \begin{bmatrix} I_1 \\ I_2 \end{bmatrix}$$

where Z_{11}, Z_{12}, Z_{21} and Z_{22} are sum of corresponding values of individual networks.

Parallel configurations:-

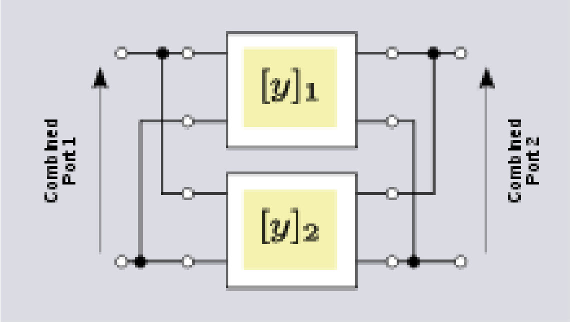

When two-ports are connected in a parallel configuration as shown in figure, The choice of two-port parameter is the *y*-parameters. The *y*-parameters of the combined network are found by matrix addition of the two individual *y*-parameter matrices.

$$[\mathbf{y}] = [\mathbf{y}]_1 + [\mathbf{y}]_2$$

Where Y parameter equation can be written as below

$$\begin{bmatrix} I_1 \\ I_2 \end{bmatrix} = \begin{bmatrix} y_{11} & y_{12} \\ y_{21} & y_{22} \end{bmatrix} \begin{bmatrix} V_1 \\ V_2 \end{bmatrix}$$

where Y_{11}, Y_{12}, Y_{21} and Y_{22} are sum of corresponding values of individual networks.

WINTER-19 EXAMINATION

Subject Name: Electric circuits and network **Subject Code: 22330**

Model Answer

Important Instructions to examiners:

1) The answers should be examined by key words and not as word-to-word as given in themodel answer scheme.
2) The model answer and the answer written by candidate may vary but the examiner may tryto assess the understanding level of the candidate.
3) The language errors such as grammatical, spelling errors should not be given moreImportance (Not applicable for subject English and Communication Skills.
4) While assessing figures, examiner may give credit for principal components indicated in thefigure. The figures drawn by candidate and model answer may vary. The examiner may give credit for anyequivalent figure drawn.
5) Credits may be given step wise for numerical problems. In some cases, the assumed constantvalues may vary and there may be some difference in the candidate's answers and model answer.
6) In case of some questions credit may be given by judgement on part of examiner of relevant answer based on candidate's understanding.
7) For programming language papers, credit may be given to any other program based on equivalent concept.

Q. No.	Sub Q. N.	Answers	Marking Scheme
1	**(A)**	**Attempt any FIVE of the following:**	**10- Total Marks**
	(a)	**Define:** **(i) Apparent power** **(ii) Real power**	**2M**
	Ans:	**(i) Apparent power** It is the product of rms values of applied voltage and circuit current. Unit: volt-ampere (VA) OR kilo-volt-ampere (kVA) OR Mega-volt-ampere (MVA) S = VI = I^2 Z volt-ampere (VA) **(ii)Real power** The active power is defined as the average power Pavg taken by or consumed by the given circuit. **(OR)**	**1 M for each definition**

		It is the power which is actually dissipated in the circuit resistance. P =V.I.CosØ Unit: - Watt OR Kilowatt	
	(b)	**Write equation of resultant impedance in R-L circuit.**	**2M**
	Ans:	**The equation of resultant impedance in R-L circuit** $Z = \sqrt{(R^2 + X_L^2)}$ Where ,R=Resistance X_L=Inductive Reactance = 2πfL Ω.	**2 M for equation**
	(c)	**State condition for resonance in R-L-C series circuit.**	**2M**
	Ans:	**The condition for resonance in R-L-C series circuit.** i) Inductive Reactance should be equal to capacitive reactance. That is $X_L = X_C$ ii) The power factor of the circuit is Cos ϕ = 1 iii)The voltage and current in the R-L-C series circuit are in phase with each other. iv)Current in the circuit is maximum and given by I =V/R. v)Impedance of the circuit is minimum and given by Z =R.	**2M for any two conditions**
	(d)	**Draw –** **(i) Practical voltage source** **(ii) Ideal current source**	**2M**
	Ans:	**i) Practical voltage source**	**1 M for each diagram**

		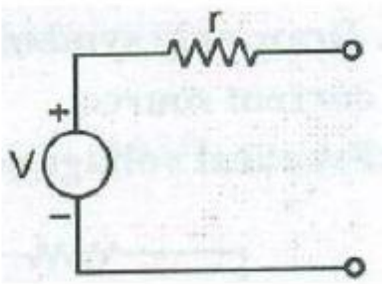 **ii) Ideal current source** 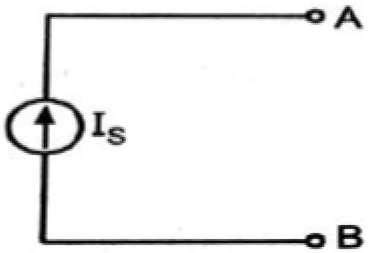 Where, I_s = Current Source R_s = internal resistance of source	
e)	**Write formula for star to delta and delta to star transformation.**	**2M**
Ans:	**The formula star to delta conversion** 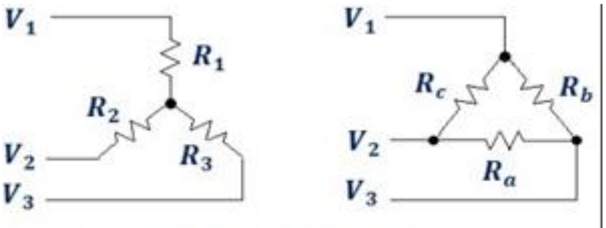 $R_a = \frac{R_1R_2+R_1R_3+R_2R_3}{R_1}$ $R_b = \frac{R_1R_2+R_1R_3+R_2R_3}{R_2}$ $R_c = \frac{R_1R_2+R_1R_3+R_2R_3}{R_3}$	**1 M for star to delta transformation** **1 M for delta to star transformation**

		The formula for Delta to Star conversion- 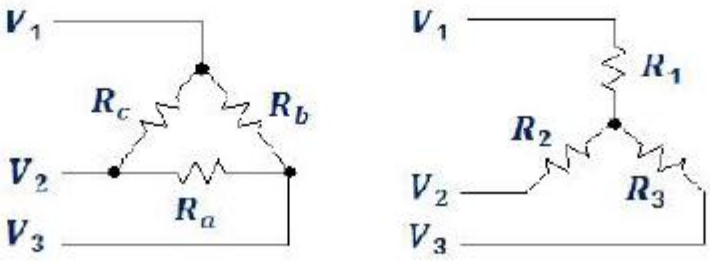 $R_1 = \frac{R_bR_c}{R_a+R_b+R_c}$ $R_2 = \frac{R_aR_c}{R_a+R_b+R_c}$ $R_3 = \frac{R_aR_b}{R_a+R_b+R_c}$	
	f)	**State maximum power transfer theorem.**	**2M**
	Ans:	Maximum Power Transfer Theorem states that “Maximum power is transferred from the source to the load when the load resistance is equal to the Thevenin’s equivalent resistance of the given circuit as seen from load terminals” .i. e, $R_L = R_{TH}$ 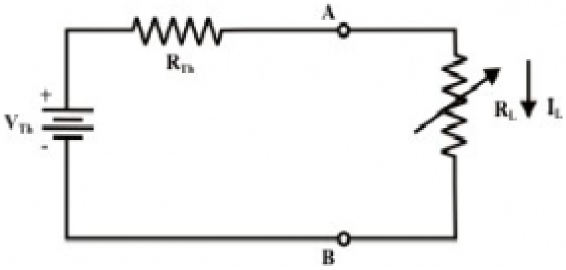 	**2M for statement**
	g)	**Write equation of short circuit Y parameters.**	**2M**
	Ans:	**The equation of short circuit Y parameters.**	**1 M for each equation**

		$\begin{bmatrix} I_1 \\ I_2 \end{bmatrix} = \begin{bmatrix} Y_{11} & Y_{12} \\ Y_{21} & Y_{22} \end{bmatrix} \begin{bmatrix} V_1 \\ V_2 \end{bmatrix}$ $I_1 = Y_{11}V_1 + Y_{12}V_2$ .... 1 $I_2 = Y_{21}V_1 + Y_{22}V_2$ .... 2 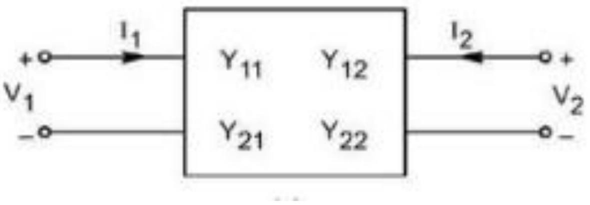	

Q. No.	Sub Q. N.	Answers	Marking Scheme
2		**Attempt any THREE of the following:**	**12- Total Marks**
	a)	**For R-C series circuit draw** **(i) Circuit diagram** **(ii) Vector diagram** **(iii) Waveform of voltage and current**	**4M**
	Ans:	**i)Circuit diagram**	**1M- circuit diagram, 1M- vector diagram, 2M- waveforms**

		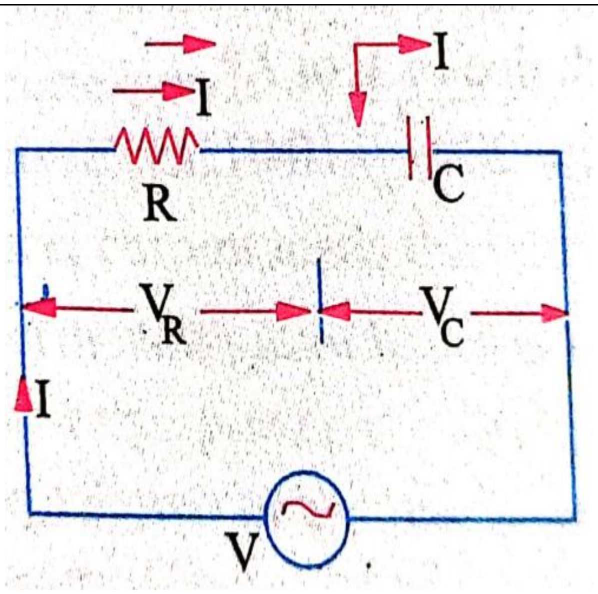 **ii)Vector diagram** 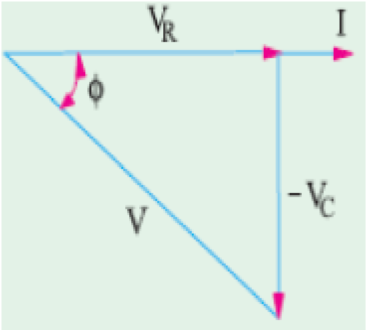 **iii)Waveform of voltage and current**	

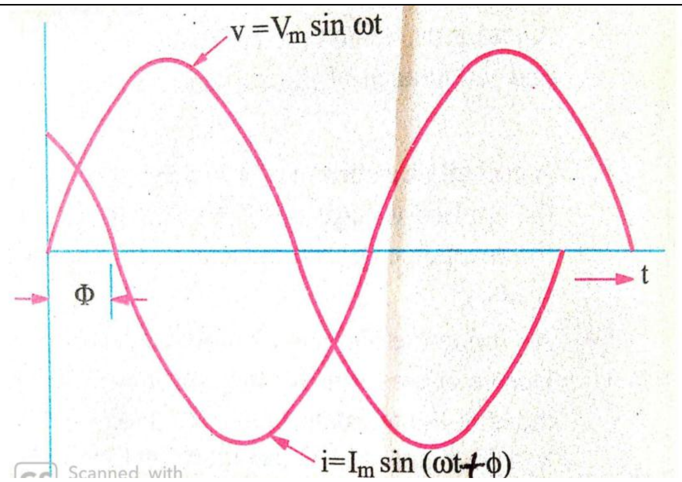

b) **Compare series and parallel resonance on the basis of** **4M**

- **(i) Resonating frequency**
- **(ii) Impedance**
- **(iii) Current**
- **(iv) Magnification**

Ans: **1M for each point**

S. No.	Parameter	Series Circuit	Parallel Circuit
1	Resonating frequency	$f_r = \frac{1}{2\pi\sqrt{LC}}$	$f_r = \frac{1}{2\pi}\sqrt{\frac{1}{LC} - \frac{R^2}{L^2}}$
2	Impedance	Minimum, Z = R	Maximum, Z = L/CR
3	Current	Maximum, I = V/R	Minimum, I = V/(L/CR)
4	Magnification	Voltage magnification takes place	Current magnification takes place

c) **Explain the suitable example to convert a practical current source into equivalent voltage source.** **4M**

WINTER-19 EXAMINATION

Subject Name: Electric circuits and network **Subject Code:** 22330

Model Answer

<table>
<tr><td></td><td>Ans:</td><td>
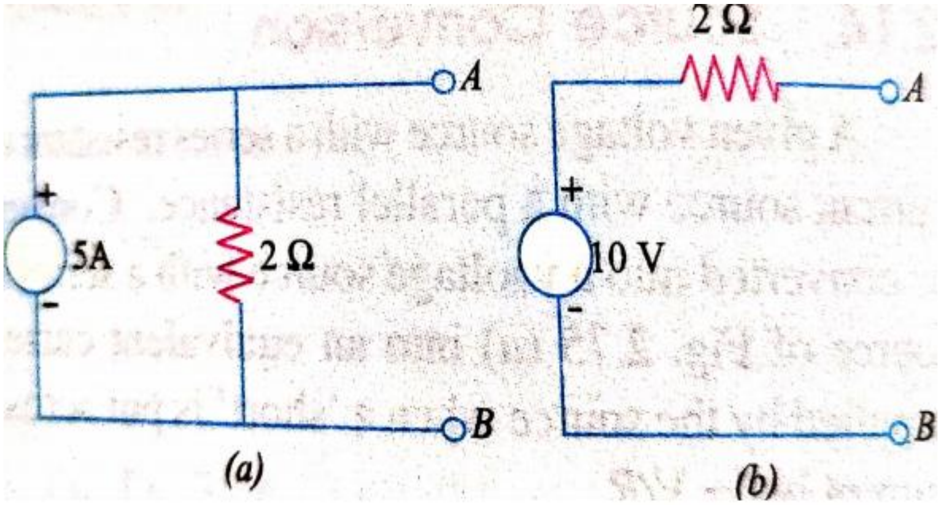

The open- circuit voltage across terminals A and B is

V_{oc} = drop across R

=5x2=10V

Hence, voltage source has a voltage of 10V and the same resistance of 2Ω
</td><td>2M-circuit diagram, 2M-conversion</td></tr>
<tr><td></td><td>d)</td><td>Write the steps for finding the current through an element by Thevenin’s theorem.</td><td>4M</td></tr>
<tr><td></td><td>Ans:</td><td>
Steps to find Thevenin’s equivalent circuit, taking an example is as follows:

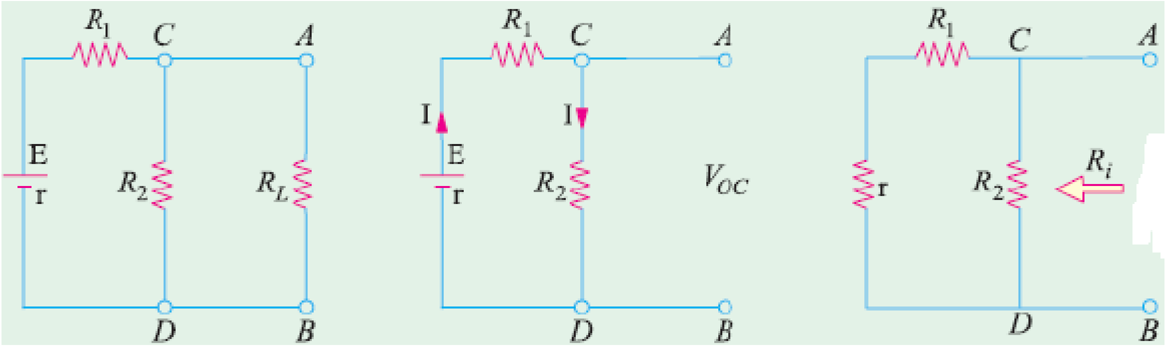

Fig.(a) fig.(b) fig.(c)
</td><td>1M each step</td></tr>
</table>

1. From the given circuit (fig.a),Remove R_L from the terminals A and B and redraw the circuit as shown in Fig.b.

2. Calculate the open-circuit voltage V_{oc} which appears across terminals A and B.
As seen, V_{oc} = drop across R_2 = IR_2 where I is the circuit current when A and B are open.

$I = \frac{E}{R_1 + R_2 + r}$ $\therefore\ V_{oc} = IR_2 = \frac{ER_2}{R_1 + R_2 + r}$ [r is the internal resistance of battery]
It is also called 'Thevenin voltage' V_{th}.

3.Now, imagine the battery to be removed from the circuit, leaving its internal resistance r behind and redraw the circuit, as shown in Fig.(c). When viewed inwards from terminals A and B, the equivalent resistance is given as,

$$R = R_2 \,||\, (R_1 + r) = \frac{R_2(R_1 + r)}{R_2 + (R_1 + r)}$$

This is called Thevenin's equivalent resistance R_{th}.
4.Connect R_L back across terminals A and B (fig.d)from where it was temporarily removed earlier.
Current flowing through RL is given by

$$I = \frac{V_{th}}{R_{th} + R_L}$$

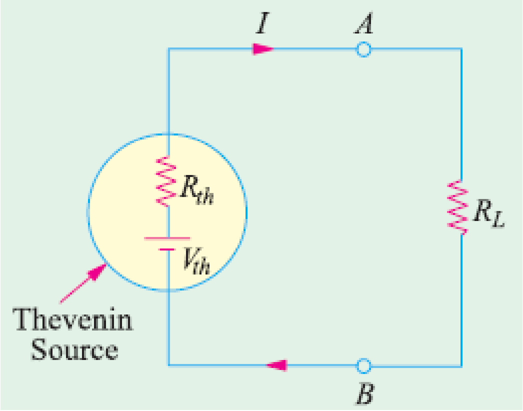

WINTER-19 EXAMINATION

Subject Name: Electric circuits and network **Subject Code:** 22330

Model Answer

Q. No.	Sub Q. N.	Answers	Marking Scheme
3		**Attempt any THREE of the following :**	**12- Total Marks**
	a)	**Explain the concept of initial and final conditions in switching circuits for elements R and L.**	**4M**
	Ans:	Concept of Initial and final condition in switching circuits for R: Consider a resistor is connected to a voltage source, using a switch as shown in fig below 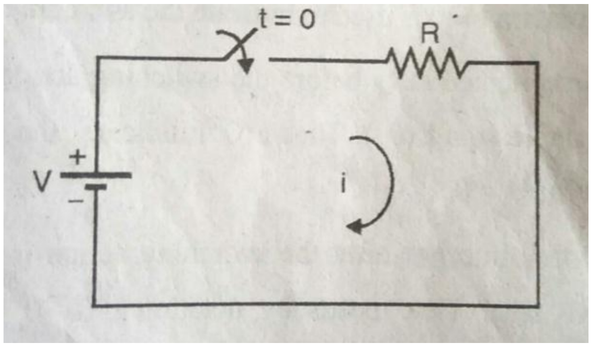 The switch is closed at time t = 0, so we get V= iR which is time independent equation. Here current changes as per voltage without any time delay. There is no change in the value of resistor R, it remains same for initial condition and final condition. 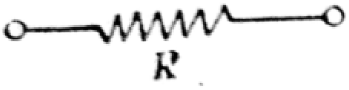   **Initial condition** **equivalent circuit at t=0+** **equivalent circuit at t= ∞** **Concept of Initial and final condition in switching circuits for L:** Consider a inductor is connected to voltage source as shown in fig below:	**2M for resistance** **2M for inductance**

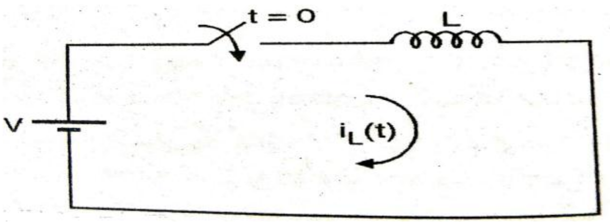

The property of inductor is to oppose any change in current. So the current through an inductor cannot change instantaneously. There are 2 cases.

i) If no initial current is passing through inductor, then at t= 0+, it acts as open circuit. The final condition is given by the equation v_L =L di/dt.
At t=∞, it acts as short circuit.

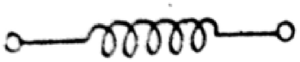
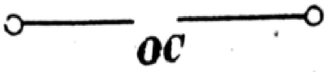

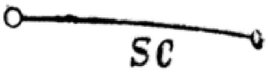

Initial condition **equivalent circuit at t=0+** **equivalent circuit at t= ∞**

ii) If initial current is passing through inductor, then at t= 0+, it acts as constant current source of value $I_{0.}$

At t=∞,(final condition),the inductor acts as current source of value I_o in parallel with short circuit.(I_0 is the current in inductor just before switching)

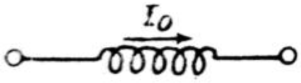

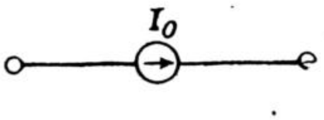

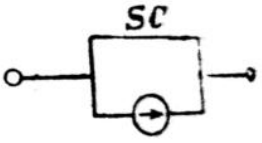

Initial condition **equivalent circuit at t=0+** **equivalent circuit at t= ∞**

b)	**Derive an expression for resonant frequency of series RLC circuit.**	**4M**

	Ans:	At resonance frequency in RLC series circuit, we have inductive reactance is equal to capacitive reactance i.e. $X_L = X_C$ As ,$X_L = 2\pi f_r L$ and $X_C = 1/2\pi f_r C$, we can write $\therefore \quad 2\pi f_r L = \frac{1}{2\pi f_r C}$ $\therefore \quad f_r^2 = \frac{1}{4\pi^2 LC}$ $\therefore f_r = \frac{1}{2\pi\sqrt{LC}}$ Hz Where fr is the resonant frequency in RLC series circuit.	**4 M**
	c)	**Derive an expression for delta to star transformation.**	**4M**
	Ans:	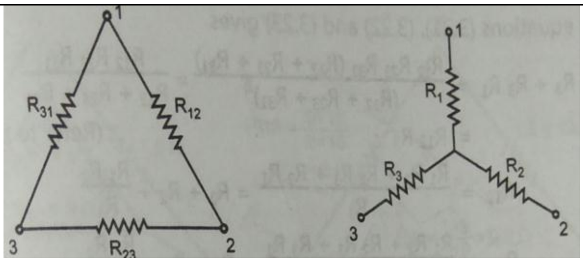 Equivalent delta and star network For delta network the resistance between the terminals 1 and 2 consists of R_{12} in parallel with (R_{23}+R_{31})Hence ,the resistance between the terminals 1 and 2 is	**1M**

		$= \frac{R_{12}(R_{23}+R_{31})}{R_{12}+R_{23}+R_{31}}$	
		In case of star network the resistance between the terminals 1 and 2 is=R1+R2,so we get	
		$R_1 + R_2 = \frac{R_{12}(R_{23}+R_{31})}{R_{12}+R_{23}+R_{31}}$ --i)	
		$R_2 + R_3 = \frac{R_{23}(R_{31}+R_{12})}{R_{12}+R_{23}+R_{31}}$	**1M**
		$R_3 + R_1 = \frac{R_{31}(R_{12}+R_{23})}{R_{12}+R_{23}+R_{31}}$ ----ii & iii)	
		Subtracting equation(ii) from(i),we get	
		$R_1 - R_3 = \frac{R_{12}R_{23} + R_{12}R_{31} - R_{23}R_{31} - R_{23}R_{12}}{R_{12}+R_{23}+R_{31}}$	**1M**
		$R_1 - R_3 = \frac{R_{12}R_{31} - R_{23}R_{31}}{R_{12}+R_{23}+R_{31}}$ ----iv)	

		Adding equations (iii) and(iv),we have 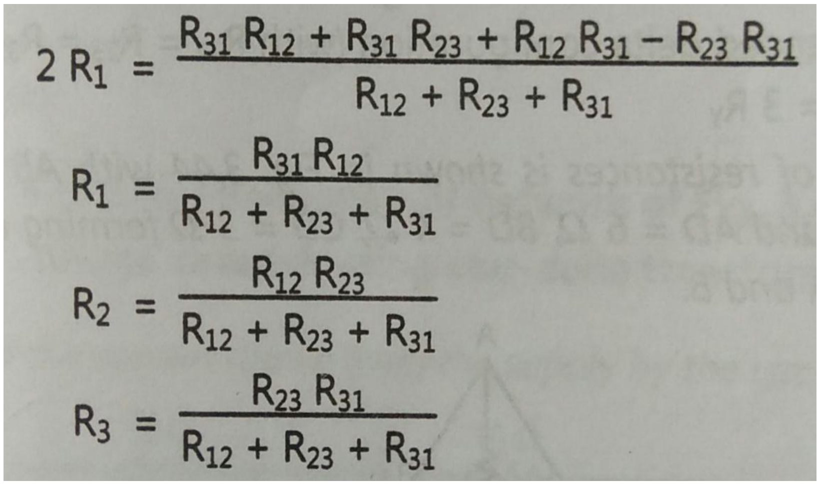 $2 R_1 = \frac{R_{31} R_{12} + R_{31} R_{23} + R_{12} R_{31} - R_{23} R_{31}}{R_{12} + R_{23} + R_{31}}$ $R_1 = \frac{R_{31} R_{12}}{R_{12} + R_{23} + R_{31}}$ $R_2 = \frac{R_{12} R_{23}}{R_{12} + R_{23} + R_{31}}$ $R_3 = \frac{R_{23} R_{31}}{R_{12} + R_{23} + R_{31}}$	**1M**
	d)	**State super position theorem. Write steps to find current in an element using super position theorem.**	**4M**
	Ans:	Statement of superposition theorem: In any linear network containing two or more sources, the current in any element is equal to algebraic sum of the current caused by individual source acting alone, while the other sources are replaced for the time being by resistances equal to their internal resistances. Steps to find current using superposition theorem: 1. Select any one energy source. 2. Replace all other energy sources i.e. voltage source by short circuit and current source by open circuit. 3. Calculate voltage drop and branch current due to selected energy source. 4. Repeat steps 1,2,3 for each source individually. 5. Add algebraically the voltage drops and branch currents to obtain combined effect of all sources.	**2M – statement** **2M for steps**

Q. No.	Sub Q. N.	Answers	Marking Scheme
4		**Attempt any THREE of the following :**	**12- Total Marks**
	(a)	**A series combination of resistance 100 ohm and capacitance 50µf is connected in series to a 230 V, 50HZ supply. Calculate** **(i) Capacitive reactance** **(ii) Current** **(iii) Power factor** **(iv) Power consumed**	**4M**
	Ans:	Solution: For RC series circuit	**1M** **1M** **1M**

		Given R=100 Ω , C =50 μf , V=230V , f=50 Hz (i) Capacitive Reactance $X_c = \frac{1}{2\pi f C} = \frac{1}{2\pi \times 50 \times 50 \times 10^{-6}} = \underline{\underline{63.66 \Omega}}$ (ii) Current $I = \frac{V}{Z} = \frac{V}{\sqrt{R^2+X_c^2}} = \frac{230}{\sqrt{(100)^2+(63.66)^2}}$ $= \frac{230}{118.54} = \underline{\underline{1.94}}$ A (iii) Power factor $\cos\phi = \frac{R}{Z} = \frac{100}{118.54} = \underline{0.8435}$ leading (iv) Power consumed $P = VI\cos\phi = 230 \times 1.94 \times 0.8435$ $= \underline{\underline{376.36}}$ W	**1M**
(b)	**Two unpedauces given by Z1 = 10 + j5 and Z2 = 8 + j9 are joined in parallel and connected across a voltage of V = 200 + j0. Calculate the circuit current and branch currents. Draw the vector diagram.**		**4M**
Ans:	Solution: Given, Z1=10+j5, Z2=8+j9, V=200+j0		

		Given: $Z_1 = 10+j5$, $Z_2 = 8+j9$ and $v = 200+j0$ To find circuit current first we have to calculate total admittance ⓐ Total admittance $Y = Y_1 + Y_2 = \frac{1}{Z_1} + \frac{1}{Z_2} = \frac{1}{(10+j5)} + \frac{1}{(8+j9)}$ $= \frac{1}{11.18\angle 26.56^\circ} + \frac{1}{12.04\angle 48.36^\circ}$ $= 0.089\angle -26.56^\circ + 0.083\angle -48.36^\circ$ $= (0.08-0.04j) + (0.06-0.06j)$ $= 0.14 - 0.1j$ $= \underline{\underline{0.17\angle -35.53^\circ}}$ ⓑ Circuit current, $I = V \times Y$ $= (200\angle 0^\circ)(0.17\angle 35.53^\circ)$ $= \underline{\underline{34\angle -35.53^\circ}}$ A ⓒ Branch current $I_1 = V \times Y_1$ $= (200\angle 0^\circ)(0.089\angle -26.56^\circ)$ $= \underline{\underline{17.8\angle -26.56^\circ}}$ A $I_2 = V \times Y_2$ $= (200\angle 0^\circ)(0.083\angle -48.36^\circ)$ $= \underline{\underline{16.6\angle -48.36^\circ}}$ A ⓓ Vector Diagram 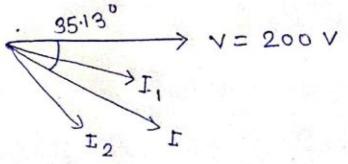 	**1M** **1M** **1M** **1M**
	(c)	**An a.c series circuit has resistance of 10ohm, inductance of 0.1H and capacitance of 10µf, voltage applied to circuit is 200V. find** **(i) Resonant frequency** **(ii) Current at resonance** **(iii) Power at resonance**	**4M**

	Ans:	Solution: For RLC series circuit Given: $R = 10\Omega$, $L = 0.1 H$, $C = 10 \mu f$, $V = 200 V$ (i) Resonant frequency $f_r = \frac{1}{2\pi\sqrt{LC}} = \frac{1}{2\pi\sqrt{0.1 \times 10 \times 10^{-6}}}$ $= \underline{\underline{159.13 \ Hz}}$ (ii) current at resonance, $I = \frac{V}{Z}$ $= \frac{V}{R} = \frac{200}{10} = \underline{\underline{20}} \ A$ (iii) Power at resonance, $P = VI\cos\phi$ $= 200 \times 20 \times 1 = 4000 W$ $= \underline{\underline{4 kW}}$	**2M** **1M** **1M**
	(d)	**Use mesh analysis to calculate ammeter current in Fig No. 1**	**4M**

		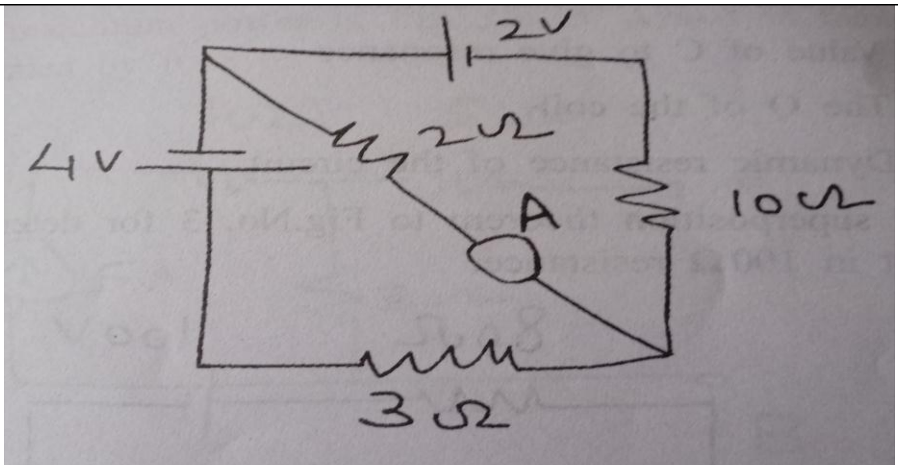 **Fig. No. 1**	
	Ans:	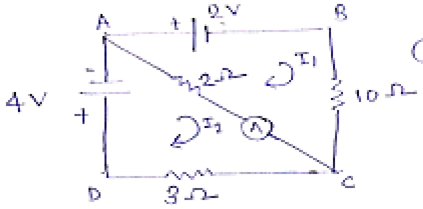 ⓐ Applying mesh analysis to loop ABCA, we have $-2-10I_1-2(I_1-I_2)=0$ $\therefore -2-12I_1+2I_2 = 0$ $\therefore -6I_1+I_2 = 1 \quad - \textcircled{\small I}$ ⓑ Applying mesh analysis to loop ACDB, we have $-2(I_2-I_1)-3I_2-4 = 0$ $\therefore -5I_2+2I_1-4 = 0$ $\therefore 2I_1-5I_2 = 4 \quad - \textcircled{\small II}$ Multiplying eqⁿ $\textcircled{\small II}$ by 3 we get, $6I_1-15I_2 = 12 \quad - \textcircled{\small III}$ Adding eqⁿ $\textcircled{\small I}$ + $\textcircled{\small III}$ we get $-14I_2 = 13$ $\therefore I_2 = -13/14 = -0.92$ A From eqⁿ $\textcircled{\small I}$ $-6I_1+(-0.92) = 1$ $\therefore -6I_1 = 1.92$ $\therefore I_1 = -0.32$ A $\therefore$ Current in ammeter is $I_1-I_2 = -0.32-(-0.92)$ $= -0.32+0.92$ $= \underline{0.6\text{ A}}$ (c to A)	**1M** **1M** **1/2M** **1/2M** **1M**

WINTER-19 EXAMINATION

Subject Name: Electric circuits and network **Subject Code:** 22330

Model Answer

	(e)	**Find the Norton equivalent resistance for the network shown in Fig No. 2** 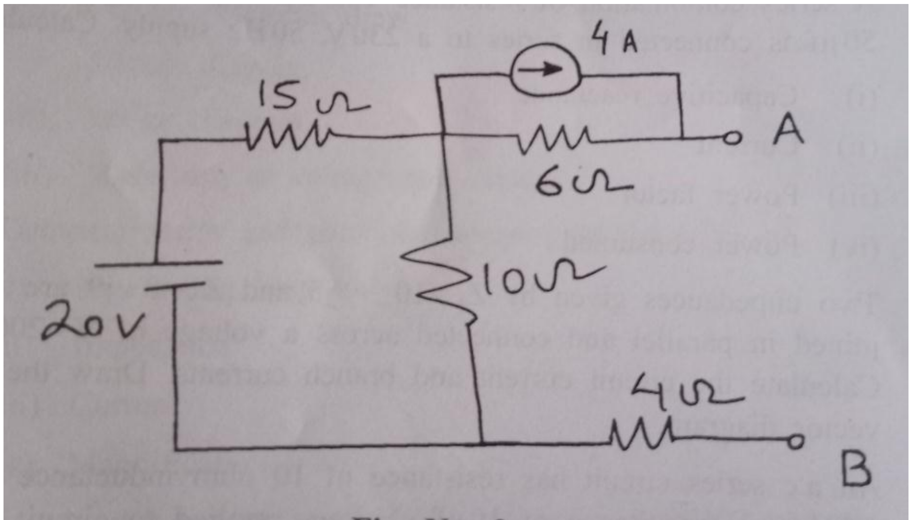 **Fig. No. 2**	**4M**
	Ans:	Solution: To find Norton's equivalent resistance removing voltage source and current source. Voltage source is replaced by short circuit and current source is replaced by open circuit so, we get circuit as	**Diagram :1M** **R_N calculati n :3M**

WINTER-19 EXAMINATION

Subject Name: Electric circuits and network **Subject Code:** 22330

Model Answer

		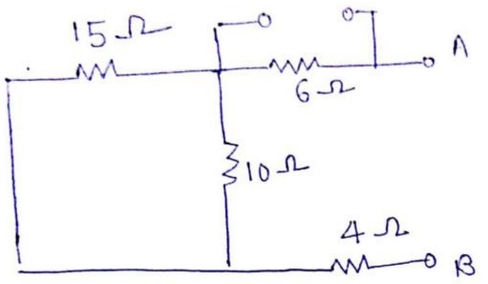 Tracing circuit from A & B, we have 15Ω & 10Ω resistor in parallel. ∴ Its equivalent resistance $R_{eq} = \frac{15\times10}{15+10} = 6\Omega$ Now 6Ω, 6Ω & 4Ω resistor are in series, ∴ we have $R_S = 6+6+4 = 16\Omega$ ∴ Norton's equivalent resistance $\underline{\underline{R_N = 16\Omega}}$	
Q. No.	Sub Q. N.	Answers	Marking Scheme
5.		**Attempt any TWO of the following:**	**12- Total Marks**
	a)	**A coil of resistance 20 ohm and inductance of 200µH is in parallel with variable capacitor. This combination is in series with a resistance of 8000 ohm. The voltage of the supply is 200 V and at frequency of 10^6 Hz. Calculate** **(i) Value of C to give resonance** **(ii) The Q of the coil** **(iii) Dynamic resistance of the circuit.**	**6M**

WINTER-19 EXAMINATION

Subject Name: Electric circuits and network **Subject Code: 22330**

Model Answer

	Ans:	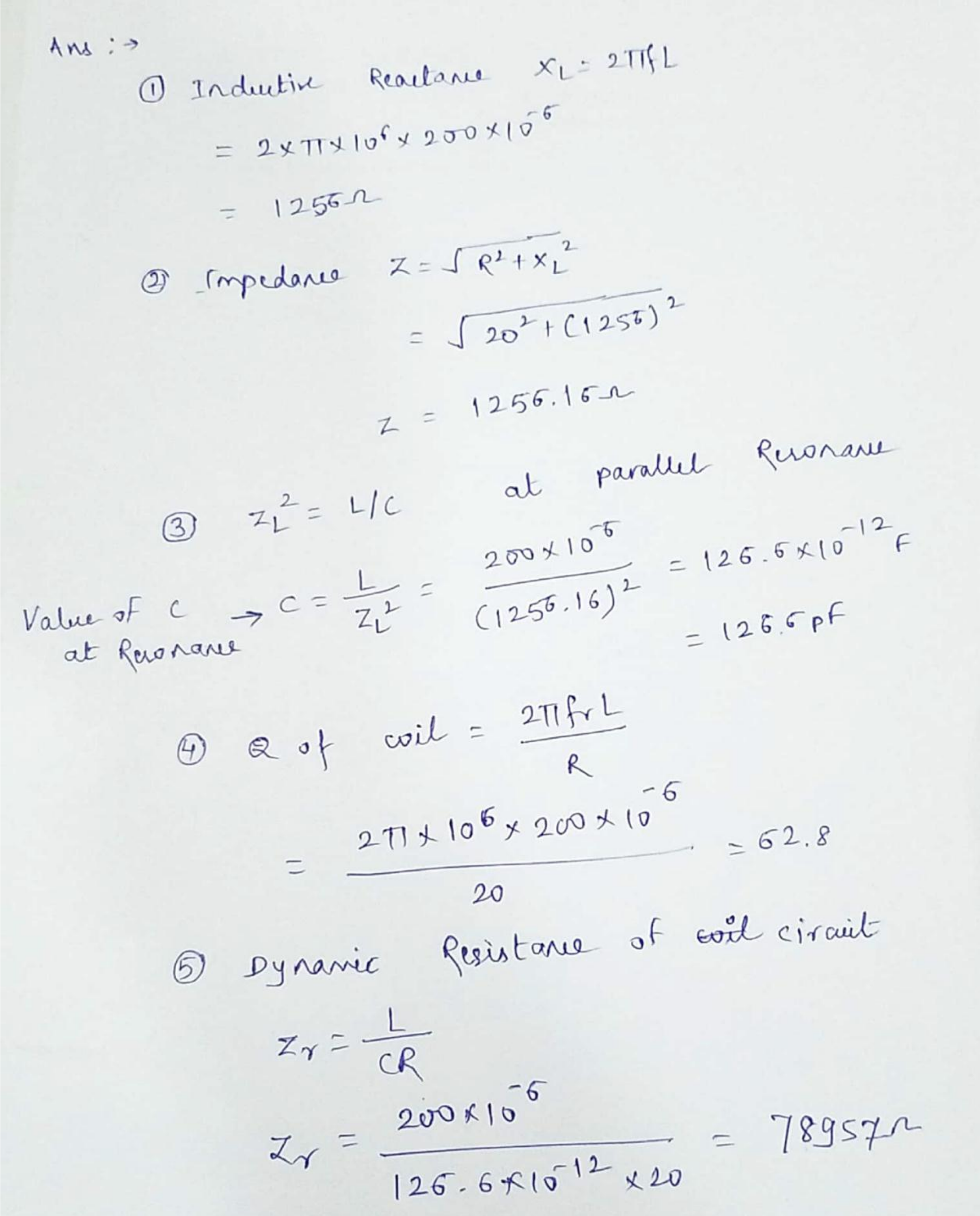 Ans :→ ① Inductive Reactance $X_L = 2\pi f L$ $= 2\times\pi\times10^6\times200\times10^{-6}$ $= 1256\,\Omega$ ② Impedance $Z = \sqrt{R^2+X_L^2}$ $= \sqrt{20^2+(1256)^2}$ $Z = 1256.15\,\Omega$ ③ $Z_L^2 = L/C$ at parallel Resonance Value of C at Resonance → $C = \frac{L}{Z_L^2} = \frac{200\times10^{-6}}{(1256.16)^2} = 126.6\times10^{-12}\,F$ $= 126.6\,pF$ ④ Q of coil $= \frac{2\pi f_r L}{R}$ $= \frac{2\pi\times10^6\times200\times10^{-6}}{20} = 62.8$ ⑤ Dynamic Resistance of ~~coil~~ circuit $Z_r = \frac{L}{CR}$ $Z_r = \frac{200\times10^{-6}}{126.6\times10^{-12}\times20} = 78957\,\Omega$	i)Value of C -2 Marks, ii)Q of coil -2 Marks iii)Dynamic Resistance -2 Marks

WINTER-19 EXAMINATION

Subject Name: Electric circuits and network **Subject Code: 22330**

Model Answer

		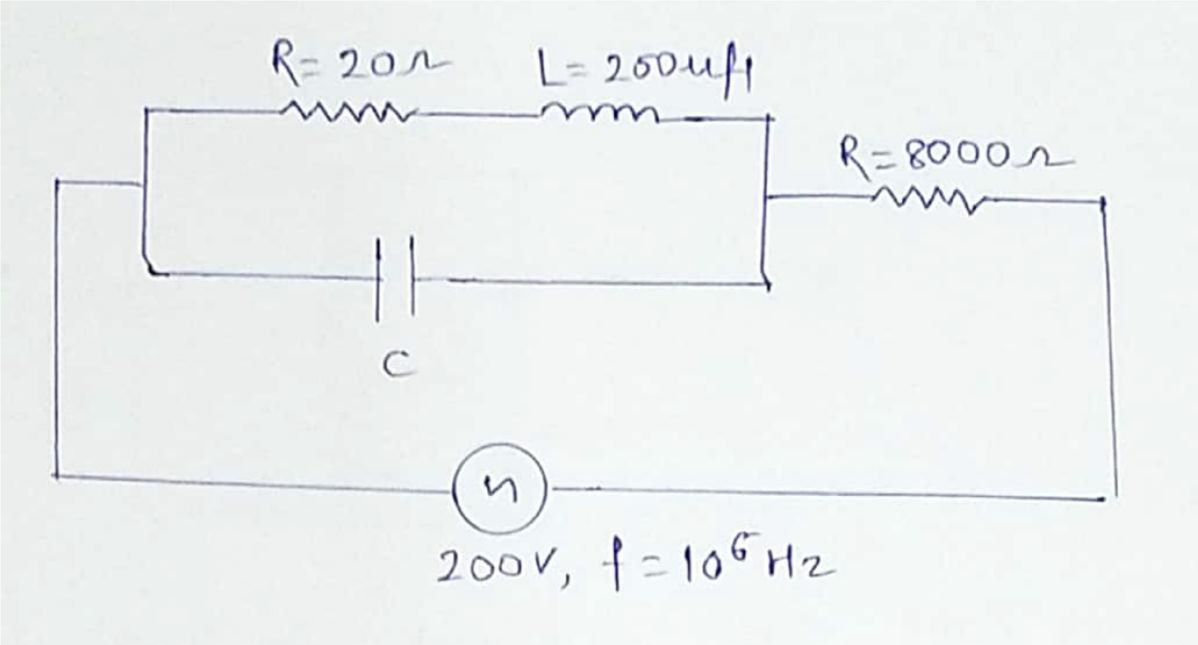	
	b)	**Apply superposition theorem to Fig No. 3 for determining the current in 100 Ω resistance.** 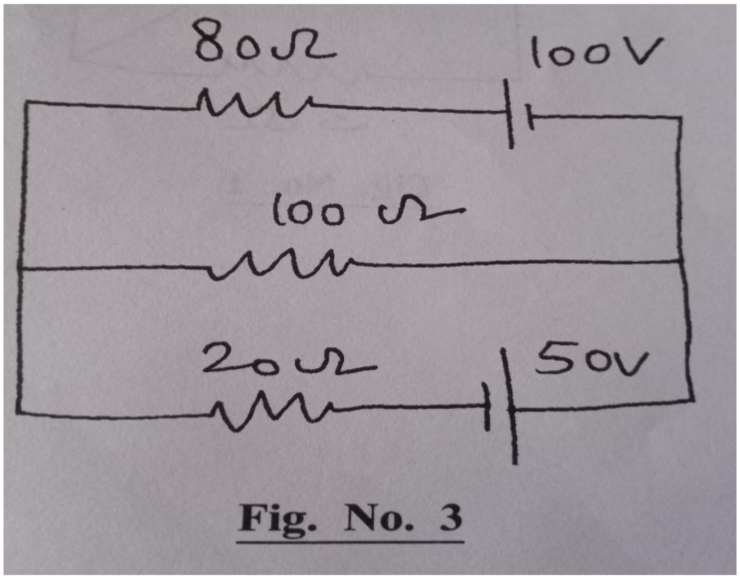 **Fig. No. 3**	**6M**

Ans:

Ans :-

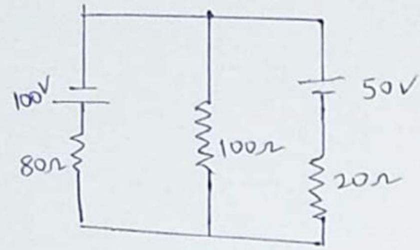

Step 1 - 2.5 Marks

,Step 2- 2.5Marks
Final current 1 Mark

step 1:- consider only 100V source & short 50V supply

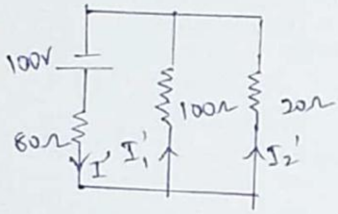

Total Resistance across supply

$= 80 + \frac{100 \times 20}{100 + 20} = 96.66$

$I' = \frac{100}{96.66} = 1.034$

current in 100Ω ~~200Ω~~ resistor $= \frac{20}{120} \times 1.034 = 0.172$

$\boxed{I_1' = 0.172A}$

Step 2:- consider only 50V source

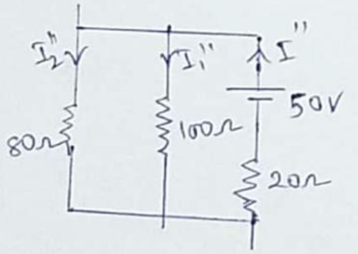

Total Resistance across supply

$= 20 + \frac{80 \times 100}{80 + 100} = 64.44$

$I'' = \frac{50}{64.44} = 0.7759$

current in 100Ω resistor $= \frac{80}{180} \times 0.7759 = 0.3448$

$I_1'' = 0.3448$

Therefore current 100Ω resistor

$I_1 = I_1'' - I_1'' = 0.3448 - 0.172 = 0.1728A$

WINTER-19 EXAMINATION

Subject Name: Electric circuits and network **Subject Code:** 22330

Model Answer

	c)	**Draw the two port network and determine the indicated parameters for the following configuration** **(i) Cascade configuration (ABCD parameter)** **(ii) Series configuration** **(iii) Parallel configuration**	**6M**
	Ans:	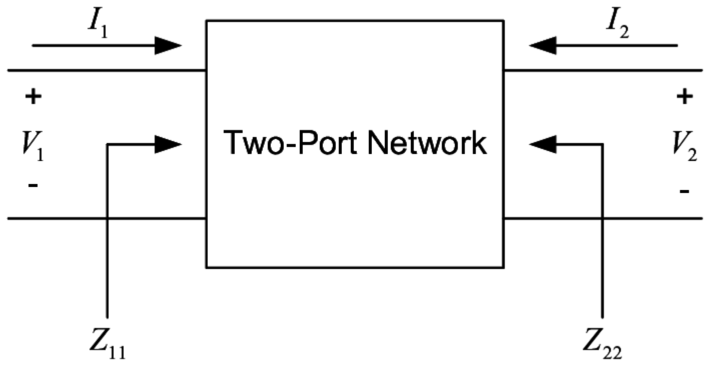 **i)Cascade Configuration** 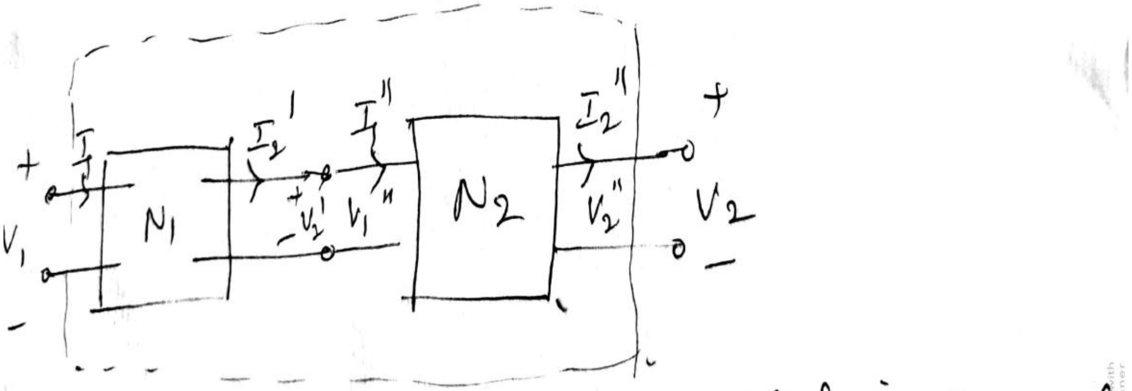 2 NWS. N_1 and N_2 connected in Cascade	Each configuration : 1M Equation for parameter : 1M

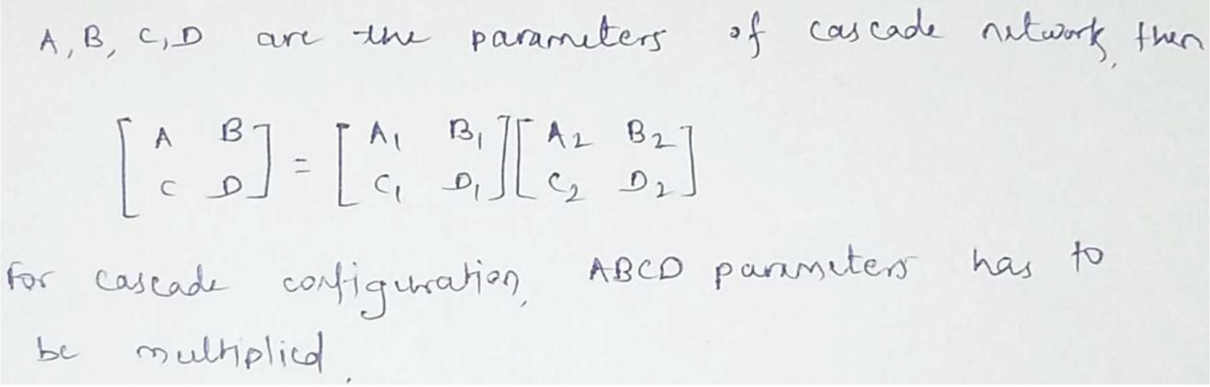

A, B, C, D are the parameters of cascade network, then

$$\begin{bmatrix} A & B \\ C & D \end{bmatrix} = \begin{bmatrix} A_1 & B_1 \\ C_1 & D_1 \end{bmatrix}\begin{bmatrix} A_2 & B_2 \\ C_2 & D_2 \end{bmatrix}$$

For cascade configuration, ABCD parameters has to be multiplied.

ii)Series Configuration

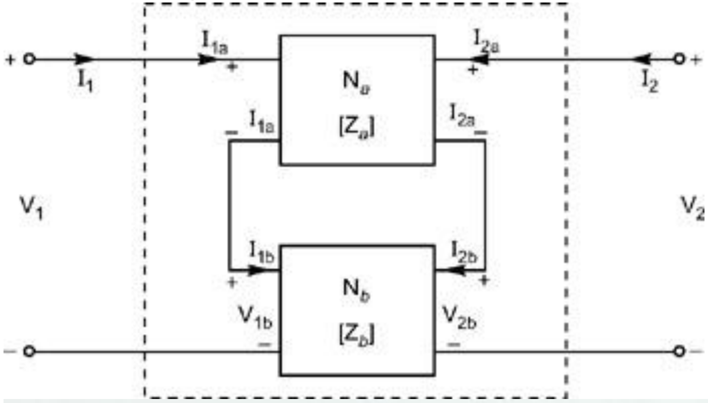

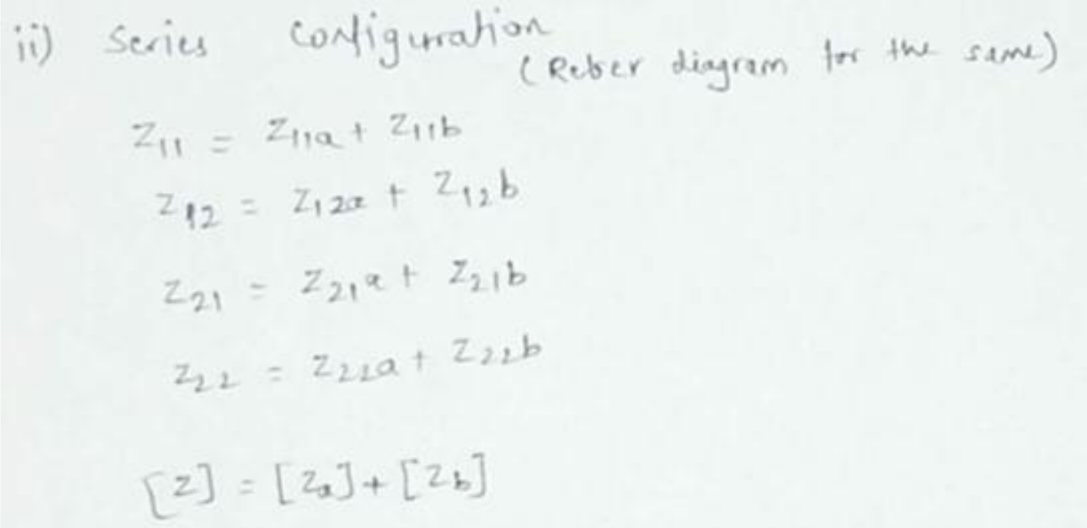

ii) Series configuration (Refer diagram for the same)

$$Z_{11} = Z_{11a} + Z_{11b}$$

$$Z_{12} = Z_{12a} + Z_{12b}$$

$$Z_{21} = Z_{21a} + Z_{21b}$$

$$Z_{22} = Z_{22a} + Z_{22b}$$

$$[Z] = [Z_a] + [Z_b]$$

iii)Parallel Configuration

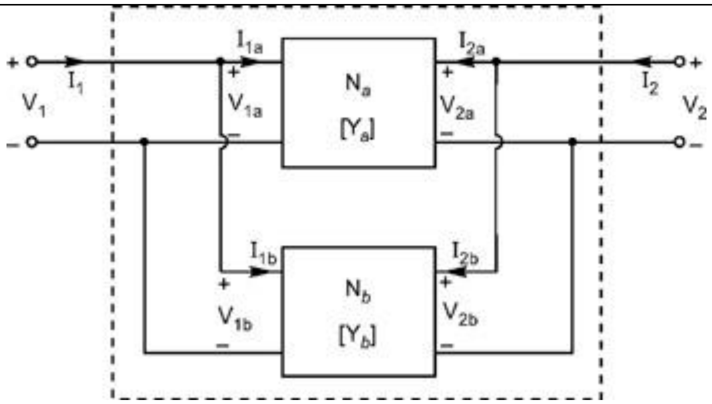

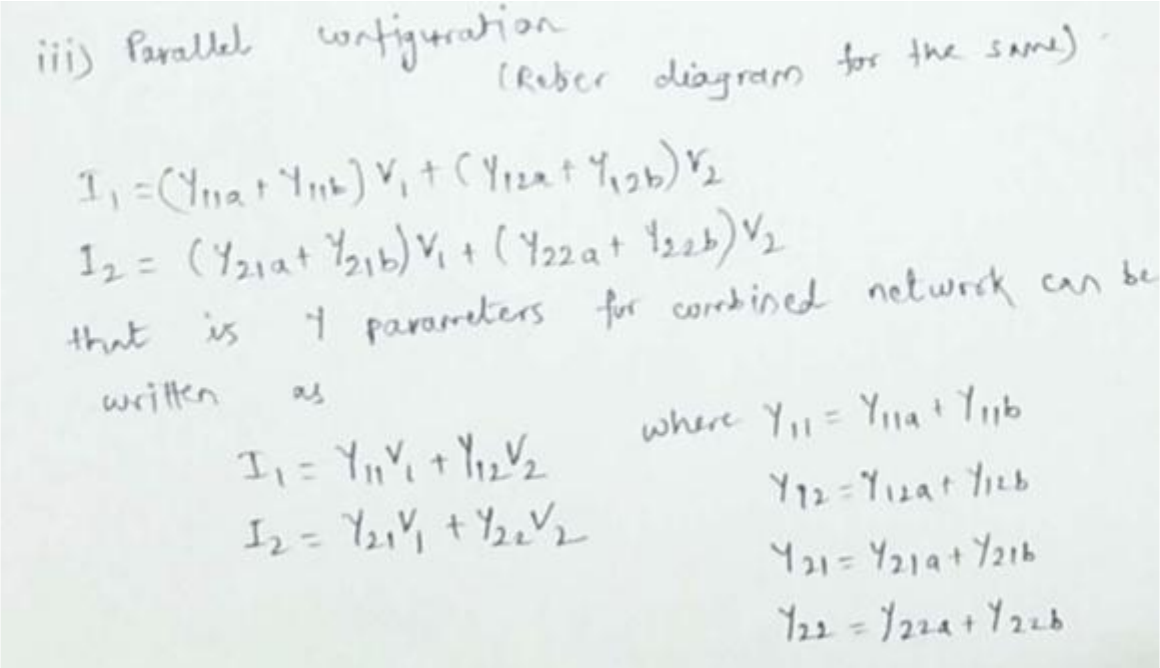
iii) Parallel configuration
(Refer diagram for the same).

$I_1 = (Y_{11a} + Y_{11b})V_1 + (Y_{12a} + Y_{12b})V_2$

$I_2 = (Y_{21a} + Y_{21b})V_1 + (Y_{22a} + Y_{22b})V_2$

that is Y parameters for combined network can be written as

$I_1 = Y_{11}V_1 + Y_{12}V_2$

$I_2 = Y_{21}V_1 + Y_{22}V_2$

where $Y_{11} = Y_{11a} + Y_{11b}$

$Y_{12} = Y_{12a} + Y_{12b}$

$Y_{21} = Y_{21a} + Y_{21b}$

$Y_{22} = Y_{22a} + Y_{22b}$

Q. No.	Sub Q. N.	Answers	Marking Scheme
6.		**Attempt any TWO of the following :**	**12- Total**

WINTER-19 EXAMINATION

Subject Name: Electric circuits and network **Subject Code:** 22330

Model Answer

			Marks
	a)	**Find current in 40 Ω and 10 Ω in Fig no. 4 node voltage analysis method.** 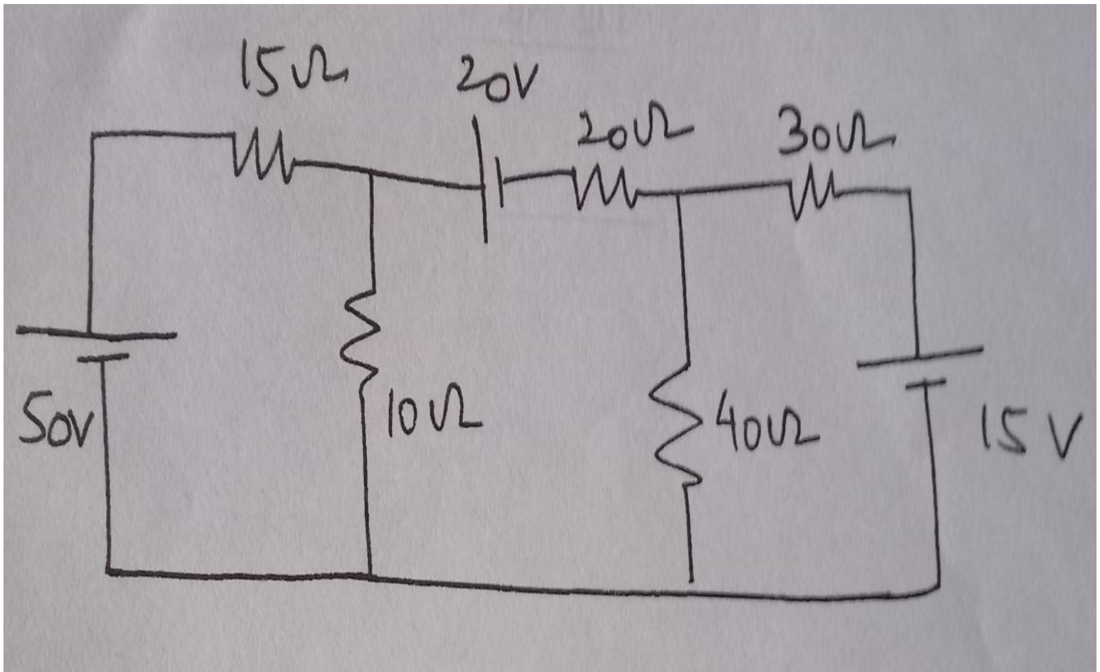 **Fig. No. 4**	**6M**

Ans:

Ans :-

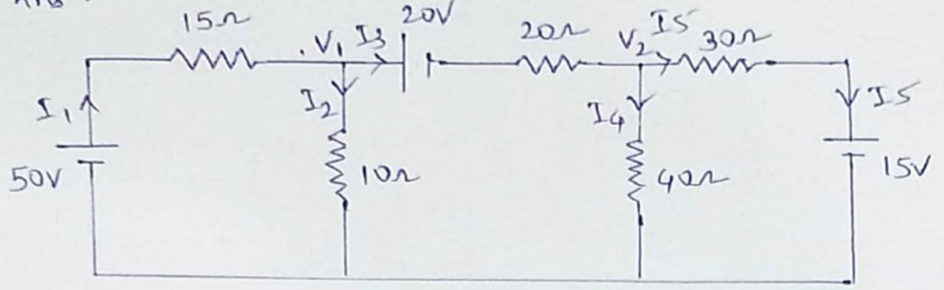

Applying KCL at nodes V_1 & V_2,

$$I_1 = I_2 + I_3 \quad \rightarrow ①$$

$$I_3 = I_4 + I_5 \quad \rightarrow ②$$

for first equation

$$I_1 = I_2 + I_3$$

$$\left(\frac{50-V_1}{15}\right) = \frac{V_1}{10} + \left(\frac{V_1-20-V_2}{20}\right)$$

$$\left(\frac{50-V_1}{15}\right) = \frac{2V_1+V_1-20-V_2}{20}$$

$$\frac{50-V_1}{15} = \frac{3V_1-20-V_2}{20}$$

$$20(50-V_1) = 15(3V_1-20-V_2)$$

$$1000 - 20V_1 = 45V_1 - 300 - 15V_2$$

$$1300 = \cancel{5}\,65V_1 - 15V_2 \quad \rightarrow ③$$

for second equation

$$I_3 = I_4 + I_5$$

$$\left(\frac{V_1-20-V_2}{20}\right) = \frac{V_2}{40} + \left(\frac{V_2-15}{30}\right)$$

V1 -2 marks,V2 -2 Marks,

I through 40 ohms- 1 Mark,

I through 30 ohm - 1Mark

WINTER-19 EXAMINATION

Subject Name: Electric circuits and network **Subject Code:** 22330

Model Answer

		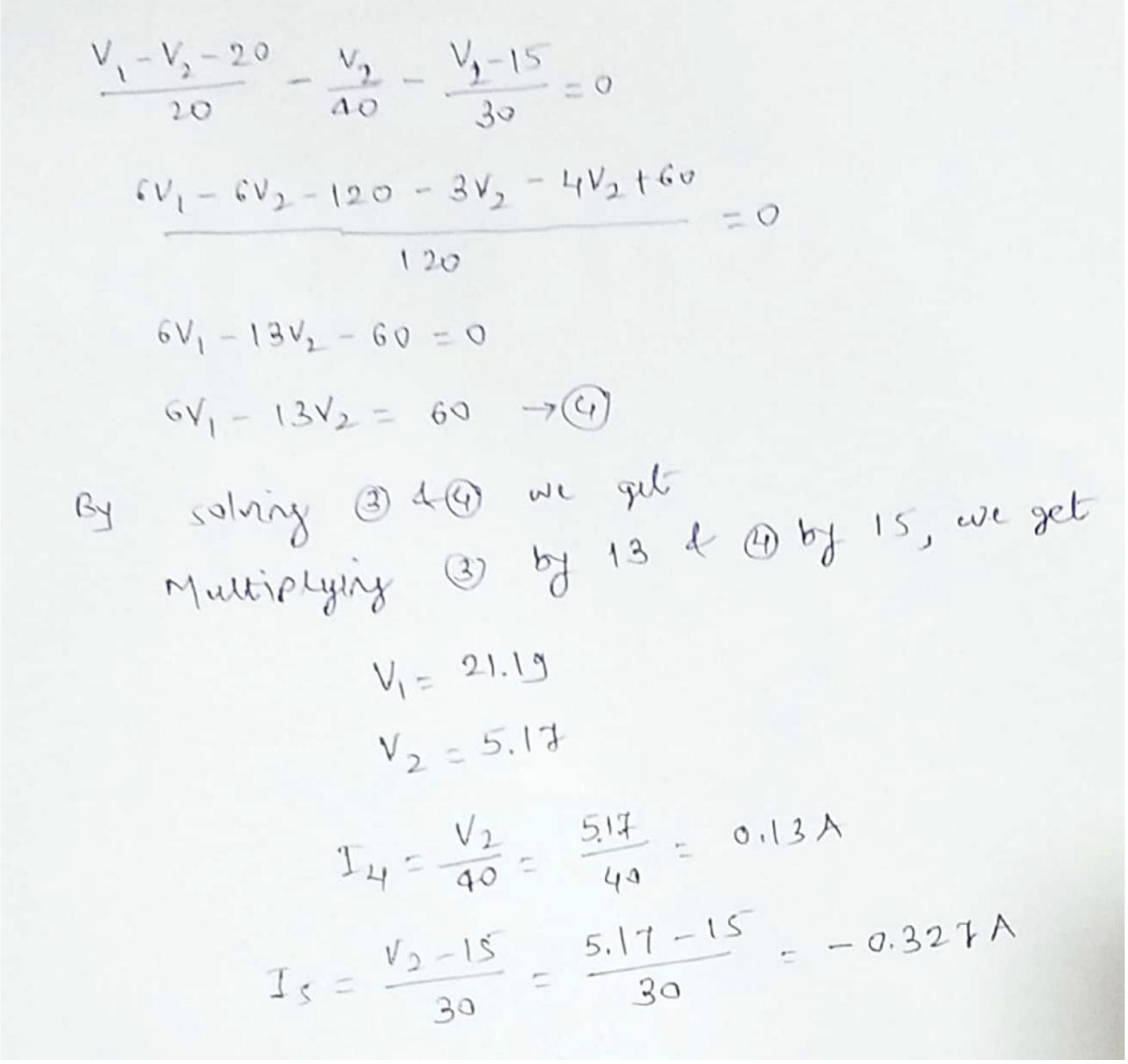 $\frac{V_1-V_2-20}{20} - \frac{V_2}{40} - \frac{V_2-15}{30} = 0$ $\frac{6V_1-6V_2-120-3V_2-4V_2+60}{120} = 0$ $6V_1-13V_2-60=0$ $6V_1-13V_2 = 60 \rightarrow ④$ By solving ③ & ④ we get Multiplying ③ by 13 & ④ by 15, we get $V_1 = 21.19$ $V_2 = 5.17$ $I_4 = \frac{V_2}{40} = \frac{5.17}{40} = 0.13A$ $I_5 = \frac{V_2-15}{30} = \frac{5.17-15}{30} = -0.327A$	
	b)	**Find the value of resistance to be connected across AB so as to consume maximum power in Fig No. 5. Also find maximum power consumed by it.**	**6M**

		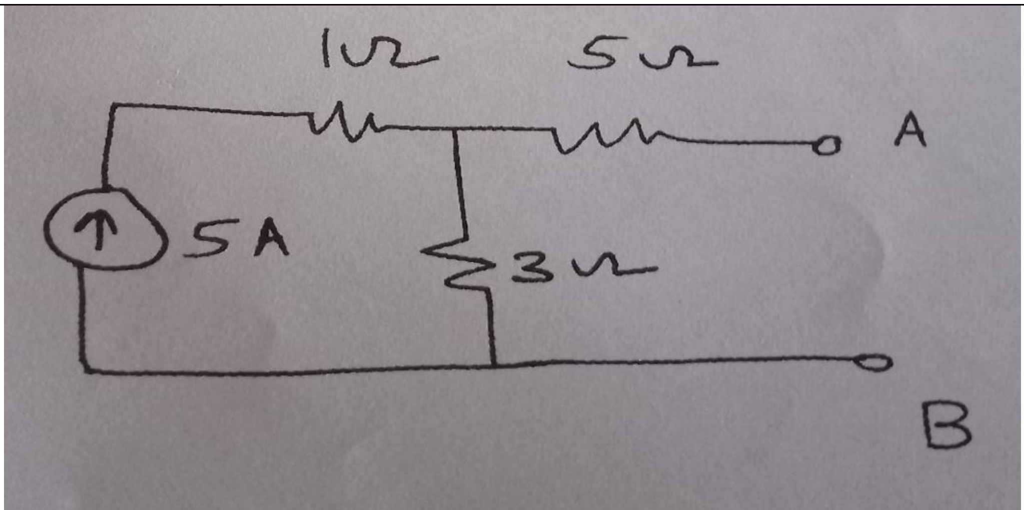 **Fig. No. 5**	

WINTER-19 EXAMINATION

Subject Name: Electric circuits and network **Subject Code: 22330**

Model Answer

	Ans:	Ans :- Maximum Power will be transferred when $R_{TH} = R_L$, so find out R_{TH} first. ① To find R_{TH}, open 5A source 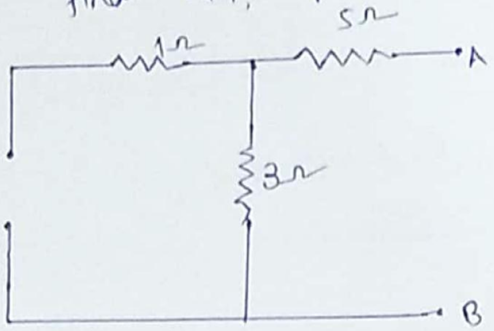 $R_{TH} = 3+5 = 8\Omega$ $R_L = 8\Omega = R_{TH}$ to transfer maximum power. ② To find Voc. 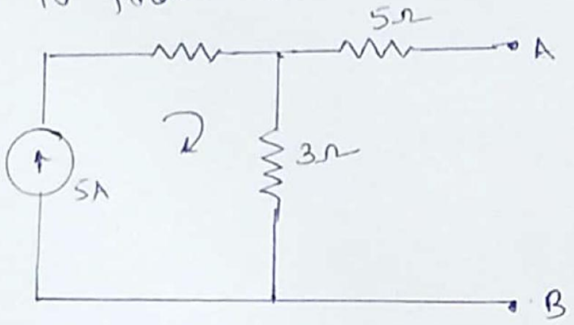 current through 3Ω = 5A 3 $\therefore V_{OC} = 5 \times 3 = 15$ Maximum Power $= \frac{V_{OC}^2}{4R_L} = \frac{15^2}{4 \times 8} = 7.03125\,W.$	Rth -2 Marks, Voc - 2Marks, Power - 2Marks
	c)	**Find Z parameters for the network shown in Fig No. 6**	**6M**

WINTER-19 EXAMINATION

Subject Name: Electric circuits and network **Subject Code:** 22330

Model Answer

		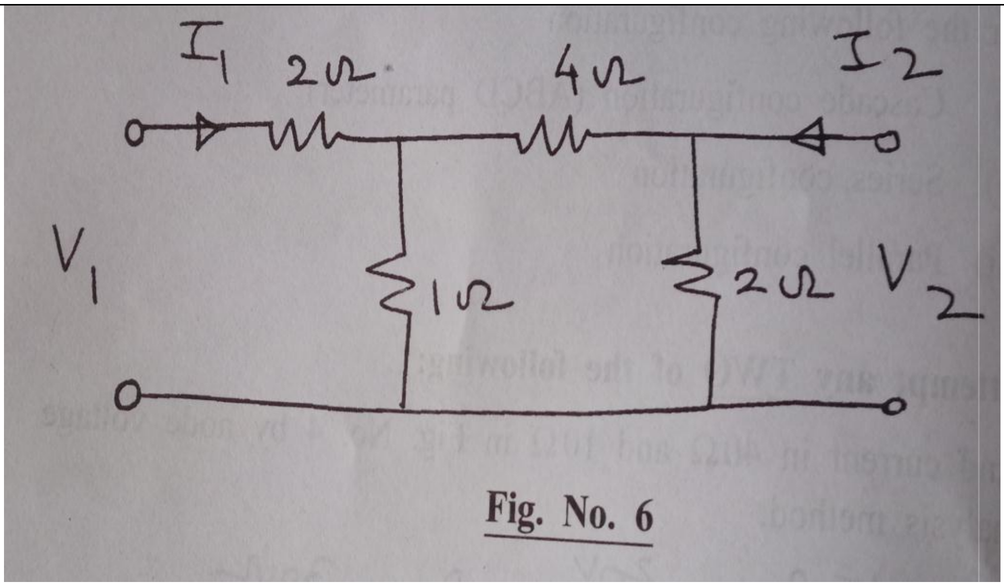 Fig. No. 6	
	Ans:		Z11-2 Marks, Z12- 1Mark, Z21 - 2Marks, Z22- 1Mark

Ans :-

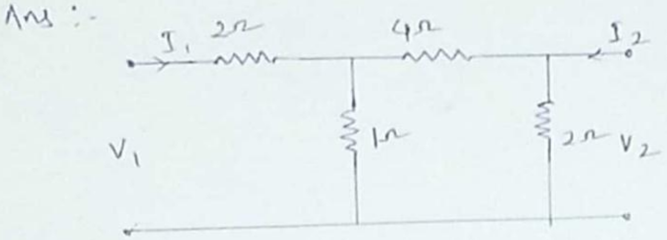

Step 1 :- To get Z_{11} & Z_{21}, consider the circuit as

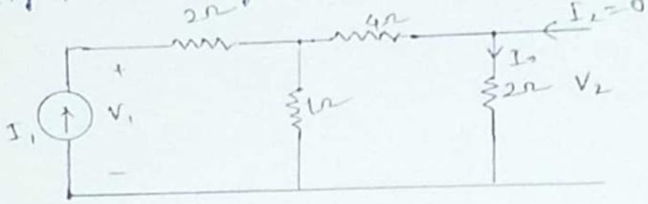

$$Z_{11} = \frac{V_1}{I_1} = 2 + 1 \| (4+2)$$

$$= 2 + \left(\frac{1 \times 6}{1+6}\right) = 2 + \frac{6}{7} = 2.85$$

$$I_0 = \frac{1}{2} I_1$$

$$Z_{21} = \frac{V_2}{I_1} = \frac{2\left(\frac{1}{7}\right) I_1}{I_1} = \frac{2}{7}\Omega = 0.28$$

Step 2 :- To get Z_{22} & Z_{12}, consider the circuit as

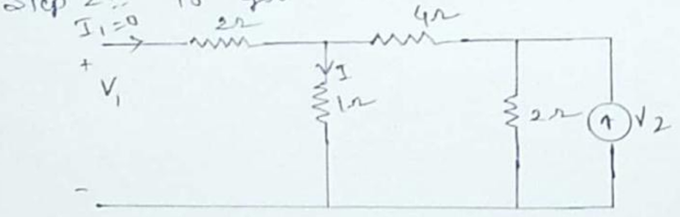

$$Z_{22} = \frac{V_2}{I_2} = 2 \| (4+1) = \frac{2 * 5}{2+5} = \frac{10}{7} = 1.44$$

$$I = \frac{2}{2+5} \times I_2 = \frac{2}{7} I_2 \qquad V_1 = 1 \times I = 1 \times \frac{2}{7} I_2 = \frac{2}{7} I_2$$

$$Z_{12} = \frac{V_1}{I_2} = \frac{2}{7} \cancel{I_2} \times \frac{1}{\cancel{I_2}} = 2/7 = 0.28$$

		$Z = \begin{bmatrix} 2.85 & 0.28 \\ 0.28 & 1.44 \end{bmatrix} \Omega$	